WHEELER METALS

Established 1968

PRE-ENGINEERED METAL BUILDINGS

Muskogee, OK. *Springfield, MO.* *Rogers, AR.*

Plans for MODOT POLK, MO 65727

STATE OF MISSOURI
GALES NUMBERS
E-14144
9-23-11
REGISTERED PROFESSIONAL ENGINEER

Prepared by: KAS Gales Co.
18772 Harmon Rd.
Fayetteville, AR. 72704

COA Number: CA5127PE
Date of Expiration: 6/30/2012

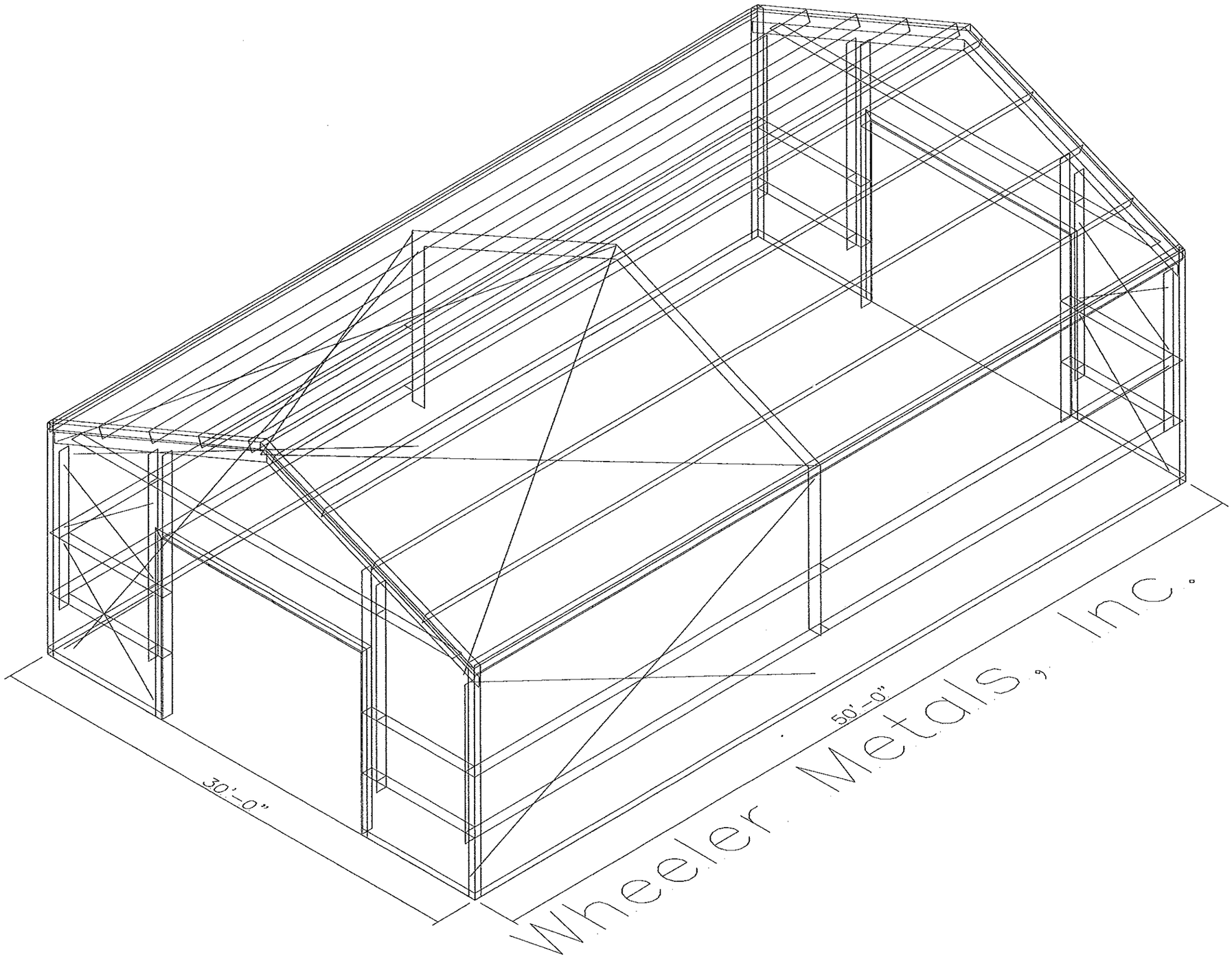

STATE OF MISSOURI
GALES
NUMBERS
E-14144
8-23-11
REGISTERED PROFESSIONAL ENGINEER

O Dia= 5/8"

⊠ Dia= 3/4"

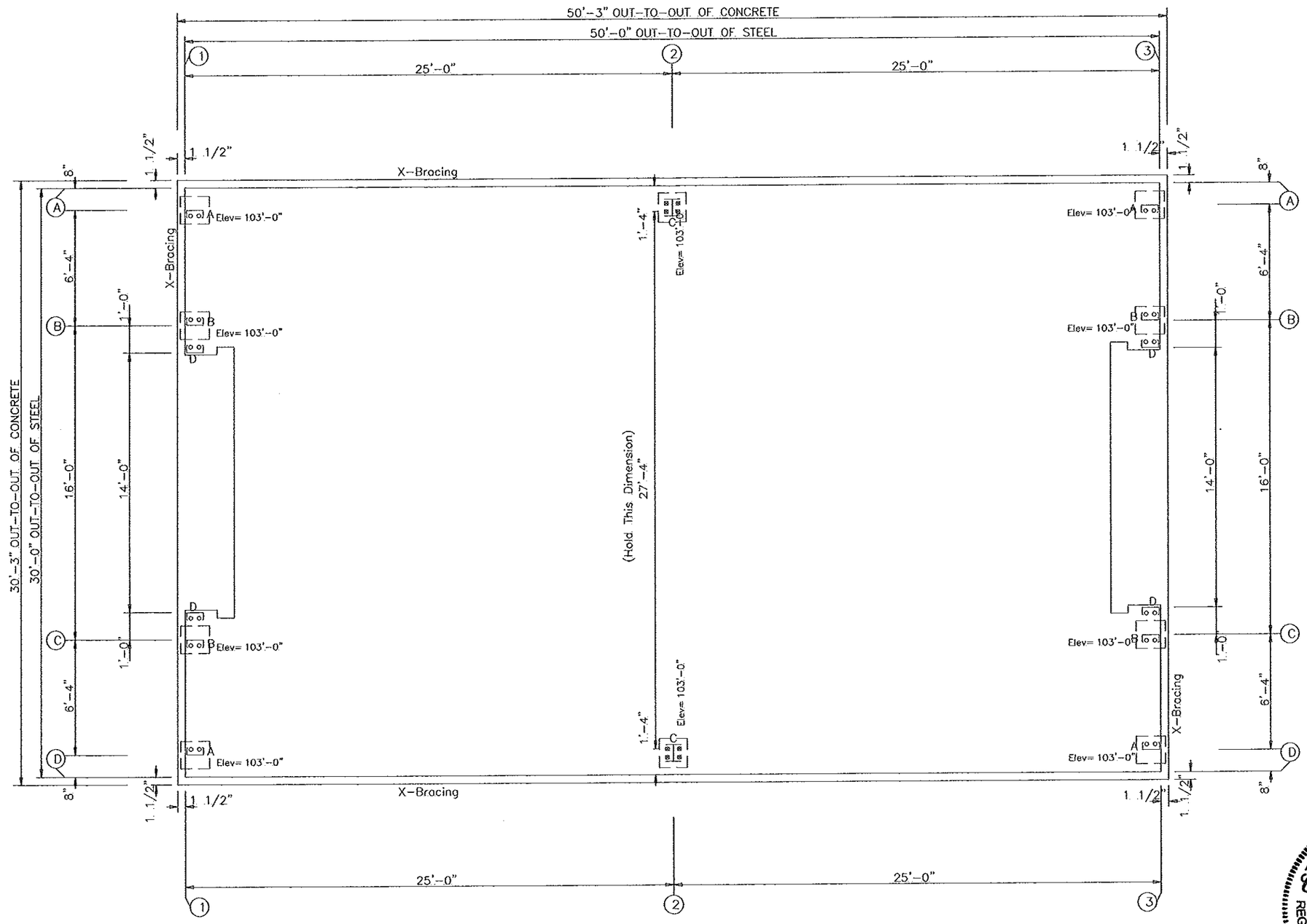

ANCHOR BOLT PLAN

NOTE: All Base Plates @ 100'-0". (U.N.)

STATE OF MISSOURI
DUANE DEWAINE GALES
NUMBERS
E-14144
8-23-11
REGISTERED PROFESSIONAL ENGINEER

Wheeler Metals, Inc.				
PROJECT		ANCHOR BOLT PLAN		
ID	MODOT12711	DESIGN:	DRAFT:	CHECK:
PROJECT		DATE: 4/11/11	SHEET	OF
ADDRESS				

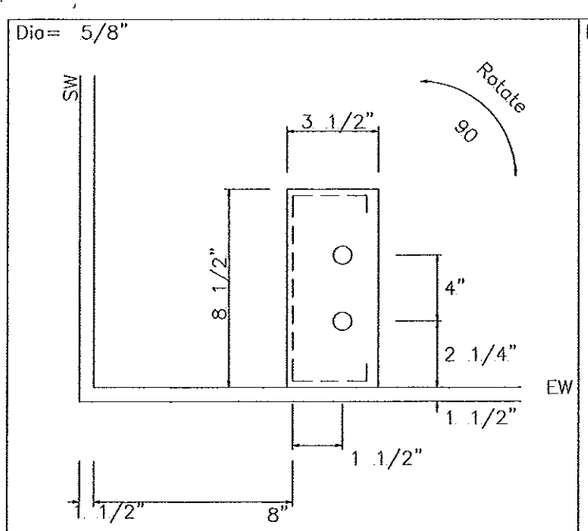

DETAIL A Base EL. 103'-0"

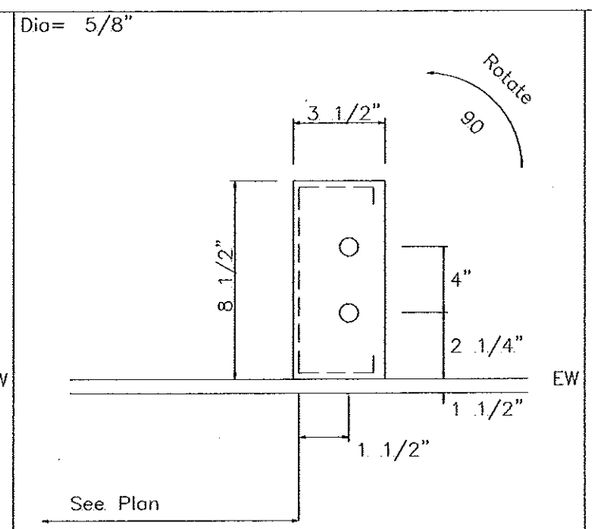

DETAIL B Base EL. 103'-0"

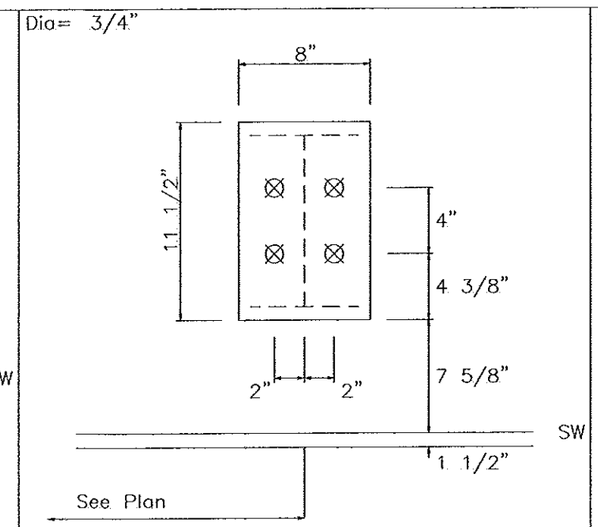

DETAIL C Base EL. 103'-0"

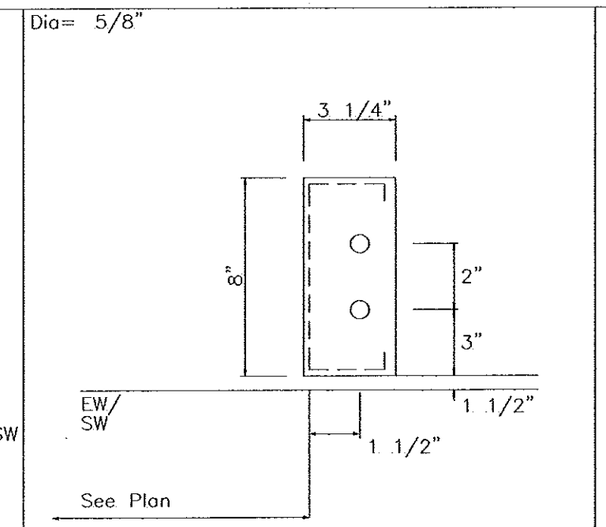

DETAIL D

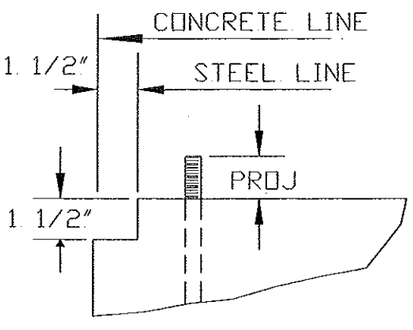

CONCRETE NOTCH AND ANCHOR BOLT PROJECTION

STATE OF MISSOURI
CARL DEWAYNE GALES
NUMBERS
E-14144
8-23-11
REGISTERED PROFESSIONAL ENGINEER

Wheeler Metals, Inc.				
PROJECT		ANCHOR BOLT DETAILS		
ID	MODOT12711	DESIGN:	DRAFT:	CHECK:
PROJECT ADDRESS		DATE: 4/11/11	SHEET	OF

NOTES FOR REACTIONS

Building reactions are based on the following building data:

Width (ft)	=	30.0
Length (ft)	=	50.0
Eave Height (ft)	=	14.0/ 14.0
Roof Slope (rise/12)	=	5.0/ 5.0
Dead Load (psf)	=	2.0
Collateral Load (psf)	=	0.0
Roof Live Load(psf)	=	20.0
Frame Live Load(psf)	=	12.0
Snow Load (psf)	=	14.0
Wind Speed (mph)	=	90.0
Wind Code	=	IBC 00
Exposure	=	C
Closed/Open	=	C
Importance Wind	=	1.00
Importance Seismic	=	1.00
Seismic Design Category	=	C
Seismic Coeff. (Fa*Ss)	=	0.31

Id	Description
1	DL+CL+0.75SL+0.75WL1+0.75Slide
2	DL+CL+0.75SL+0.75WR1+0.75Slide
3	0.60DL+WL2
4	0.60DL+WR2
5	0.60DL+LnWnd1
6	0.60DL+LnWnd2
7	DL+CL+F1UNB_SL_R
8	DL+CL+F1UNB_SL_L
9	0.60DL+WL2+WS
10	0.60DL+WR+LnWnd2
11	0.60DL+WR2+WS
12	DL+CL+0.75LL+0.75WL2+0.75WS
13	0.60DL+WS+LnWnd2
14	DL+CL+E1UNB_SL_R
15	DL+CL+E2UNB_SL_R

ANCHOR BOLT SUMMARY

Qnt	Loc	Dia (in)	Type	Proj (in)
O 8	DJ	5/8"	A307	3.00
O 16	EW	5/8"	A307	3.00
⊠ 8	RF	3/4"	A307	3.00

BRACING REACTIONS, PANEL SHEAR

Wall Loc	Wall Line	Col Line	± Reactions (k) Wind Horz	Wind Vert	Seismic Horz	Seismic Vert	Panel Shear (lb/ft)
L_EW	1	A ,B	1.7	3.9	0.2	0.4	
F_SW	D	1 ,2	1.5	0.6	0.3	0.1	
R_EW	3	D ,C	1.7	3.9	0.2	0.4	
B_SW	A	2 ,1	1.5	0.6	0.3	0.1	

FRAME LINES: 2

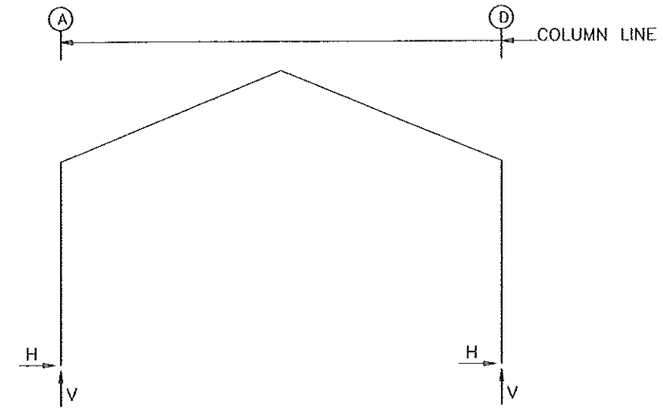

RIGID FRAME: MAXIMUM REACTIONS, ANCHOR BOLTS, & BASE PLATES

Frm Line	Col Line	Column Reactions (k) Load Id	Hmax H	V Vmax	Load Id	Hmin H	V Vmin	Anc. No	Bolt D(in)	Base Wid	Plate (in) Len	Plate (in) Thk	Grout (in)
2	A	2	3.1	3.6	3	-3.6	-2.2	4	0.750	8.000	11.50	0.500	36.0
		8	2.0	8.9	5	1.1	-4.9						
2	D	4	3.6	-2.2	1	-3.1	3.6	4	0.750	8.000	11.50	0.500	36.0
		7	-2.0	8.9	6	-1.1	-4.9						

RIGID FRAME: BASIC COLUMN REACTIONS (k)

Frame Line	Column Line	Dead Horiz	Dead Vert	Live Horiz	Live Vert	Snow Horiz	Snow Vert	Wind_L1 Horiz	Wind_L1 Vert	Wind_R1 Horiz	Wind_R1 Vert	Wind_L2 Horiz	Wind_L2 Vert
2	A	0.4	1.4	1.8	5.6	2.1	6.6	-3.5	-5.7	1.6	-3.7	-3.8	-3.1
2	D	-0.4	1.4	-1.8	5.6	-2.1	6.6	-1.6	-3.7	3.5	-5.7	-1.2	-1.1

Frame Line	Column Line	Wind_R2 Horiz	Wind_R2 Vert	LnWind1 Horiz	LnWind1 Vert	LnWind2 Horiz	LnWind2 Vert	Seismic_L Horiz	Seismic_L Vert	Seismic_R Horiz	Seismic_R Vert	LnSeis Horiz	LnSeis Vert
2	A	1.2	-1.1	0.9	-5.8	-0.1	-5.5	-0.2	-0.1	0.2	0.1	0.0	-0.1
2	D	3.8	-3.1	0.1	-5.5	-0.9	-5.8	-0.2	0.1	0.2	-0.1	0.0	-0.1

Frame Line	Column Line	F1UNB_SL_R Horiz	F1UNB_SL_R Vert	F1UNB_SL_L Horiz	F1UNB_SL_L Vert
2	A	1.5	2.4	1.6	7.5
2	D	-1.6	7.5	-1.5	2.4

ENDWALL COLUMN REACTIONS(k)

MAXIMUM VERTICAL DL+CL+LL	=	3.4
MAXIMUM VERTICAL DL+WL	=	-5.2
MAXIMUM HORIZONTAL DL+WL	=	1.1

STATE OF MISSOURI
CARL DEWAINE
NUMBERS
E-14144
8-23-11
REGISTERED PROFESSIONAL ENGINEER

Wheeler Metals, Inc.				
PROJECT		ANCHOR BOLT REACTIONS		
ID	MODOT1271.1	DESIGN:	DRAFT:	CHECK:
PROJECT		DATE: 4/11/11	SHEET	OF
ADDRESS				

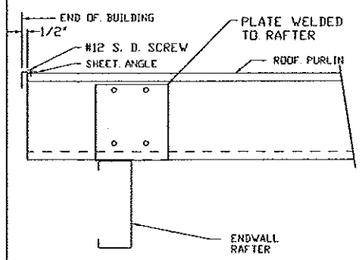

A5 SECTION THRU ENDWALL RAFTER

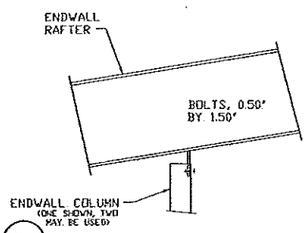

B4 ENDWALL RAFTER TO COLUMN

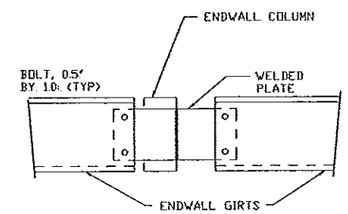

C4 ENDWALL COLUMN TO WALL GIRT

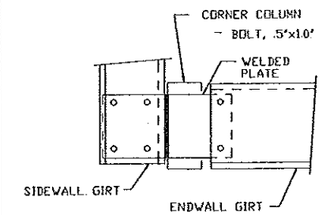

D4 CORNER COLUMN TO WALL GIRT

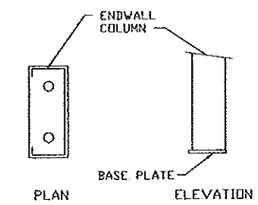

E5 BASE PLATE TO ENDWALL COLUMN OR DOOR JAMB

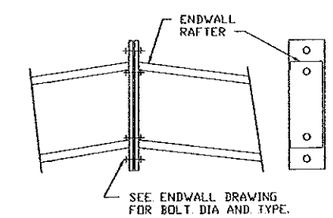

F10 RAFTER SPLICE AT SURFACE CHANGE

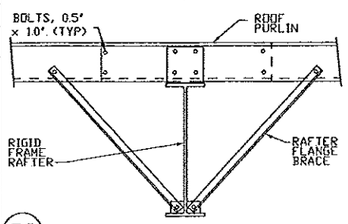

G2 ROOF PURLIN TO INTERIOR FRAME RAFTER

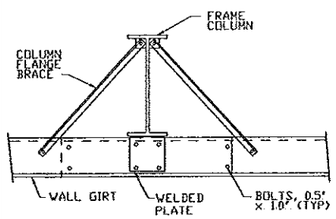

H2 WALL GIRT TO FRAME COLUMN

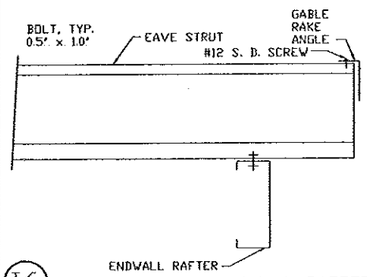

I6 EAVE STRUT TO ENDWALL RAFTER

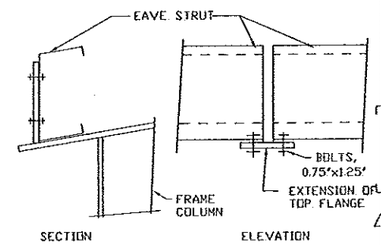

J2 EAVE STRUT TO RIGID FRAME

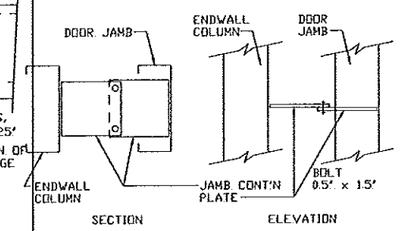

K12 DOOR JAMB TO DOOR JAMB (OR TO 'C' COLUMN)

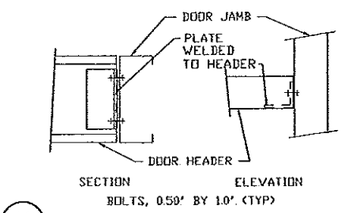

M3 DOOR HEADER TO DOOR JAMB

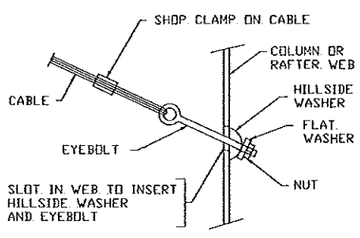

Q2 DIAGONAL CABLE, EYEBOLT END

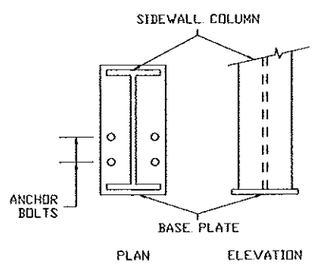

R2 ANCHOR BOLTS AT SIDEWALL COLUMN

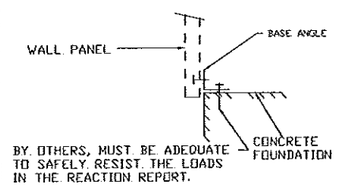

T3 SECTION THRU WALL PANEL AND CONCRETE FOUNDATION

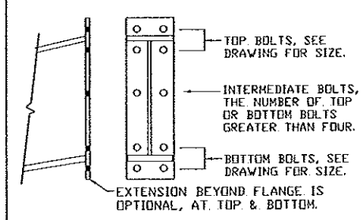

U2 BOLTED END PLATE CONNECTION AT BUILDING PEAK

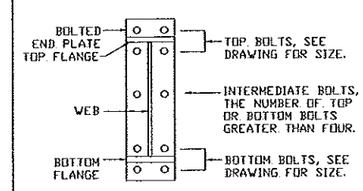

U3 BOLTS FOR RAFTER TO COLUMN CONNECTION

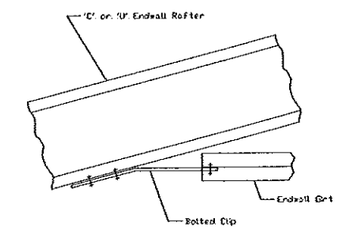

W1 SECTION OF ENDWALL GIRT TO RAFTER

STATE OF MISSOURI
CARL DEWAINE GALES NUMBERS
E-14144
8-23-11
REGISTERED PROFESSIONAL ENGINEER

Wheeler Metals, Inc.				
PROJECT		STRUCTURAL DETAILS		
ID	MODOT1271.1	DESIGN:	DRAFT:	CHECK:
PROJECT		DATE: 4/11/11	SHEET	OF
ADDRESS				

SPLICE BOLTS						
Splice Mark	Quan Top/	Bot/	Int	Bolt Type	Dia	Length
SP-1	4	4	0	A325	0.750	2.00

MEMBER SIZE TABLE (in)					
MARK	WEB DEPTH START/END	WEB PLATE THICK	WEB PLATE LENGTH	OUTSIDE FLANGE W x T x LENGTH	INSIDE FLANGE W x T x LENGTH
RF1-1	10.0/10.0	0.134	103.9	5 x 3/8" x 125.8	5 x 3/8" x 115.5
	10.0/10.0	0.134	24.0	6 x 3/8" x 14.2	
RF1-2	10.0/10.0	0.134	119.0	5 x 3/8" x 179.2	5 x 3/8" x 174.8
	10.0/10.0	0.134	60.2		

▽FLANGE BRACES: Both Sides(U.N.)
FBxxC(1): xx=length(in)
C - L2X2X1/8

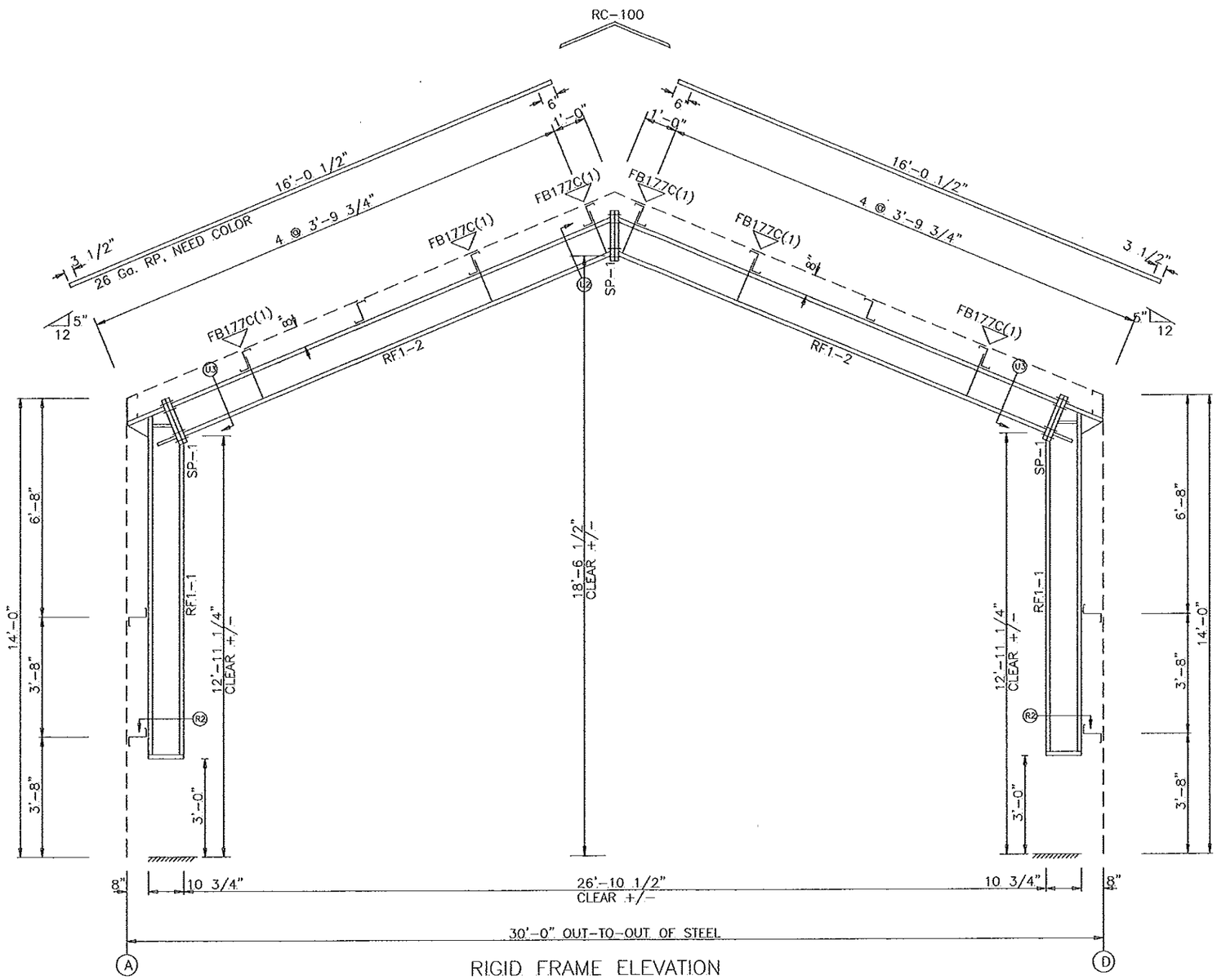

RIGID FRAME ELEVATION
FOR FRAME LINE 2

STATE OF MISSOURI
CARL DEWAINE GALES
NUMBERS
E-14144
8-22-11
REGISTERED PROFESSIONAL ENGINEER

Wheeler Metals, Inc.				
PROJECT		RIGID FRAME ELEVATION		
ID	MODOT12711	DESIGN:	DRAFT:	CHECK:
PROJECT ADDRESS		DATE: 4/11/11	SHEET	OF

BOLT TABLE FRAME LINE 1				
LOCATION	QUAN	TYPE	DIA	LENGTH
ER-1/ER-2	8	A325	5/8"	1 3/4"
Columns/Raf	2	A325	5/8"	1 1/2"
Jamb	2	A325	5/8"	1 1/2"

MEMBER TABLE FRAME LINE 1		
MARK	PART	LENGTH
EC-1	8X25C14	9'-9 1/4"
EC-2	8X25C14	12'-4 15/16"
EC-3	8X25C14	12'-4 15/16"
EC-4	8X25C14	9'-9 1/4"
ER-1	8X25C14	16'-2 3/4"
ER-2	8X25C14	16'-2 3/4"
DJ-1	8X25C14	15'-9 7/8"
DH-1	8X25C14	14'-0"
G-1	8X25Z14	5'-7 1/2"
G-2	8X25Z14	3'-5 5/16"
G-3	8X25Z14	14'-0"
CB-1	0.25_CBL	7'-9"
CB-2	0.25_CBL	9'-11"
CB-3	0.25_CBL	8'-3"

TRIM TABLE FRAME LINE 1		
◇ID	PART	LENGTH
1	CT-110c	14'-6"
2	RT-100d	16'-6"
3	RT-END	1 1/2"
4	PB-100	1'-8"
5	JH-100b	12'-6"
6	JT-100b	12'-6"
7	JH-100c	14'-6"
8	HT-110c	14'-6"

CONNECTION PLATES FRAME LINE 1	
□ID	MARK/PART
1	l1
2	b1

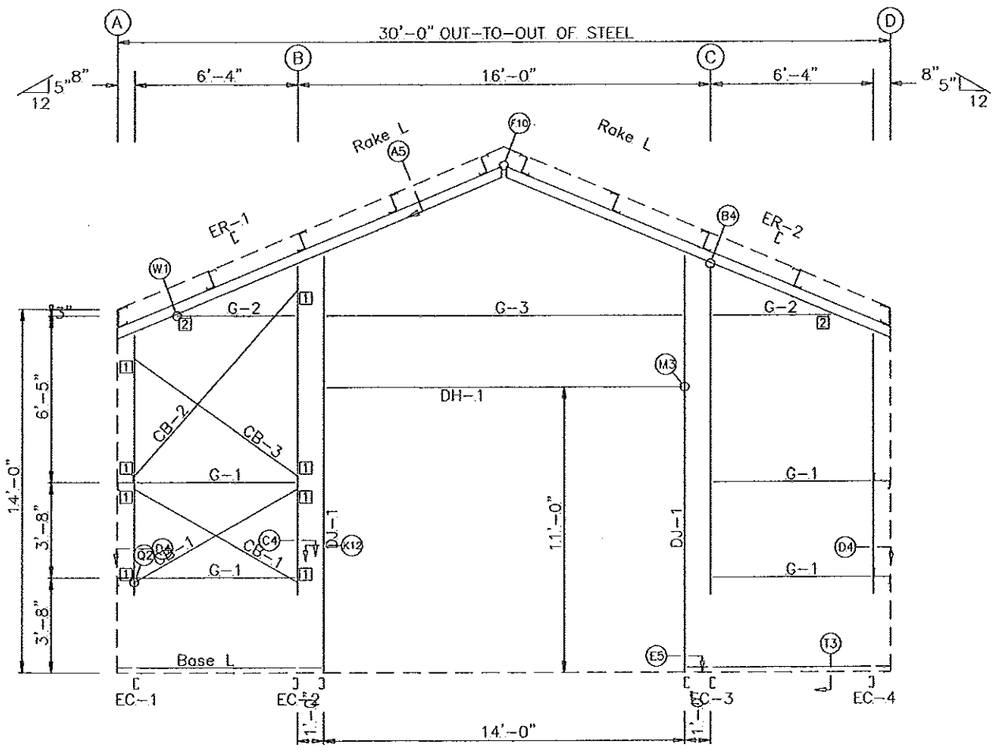

ENDWALL FRAMING: FRAME LINE 1

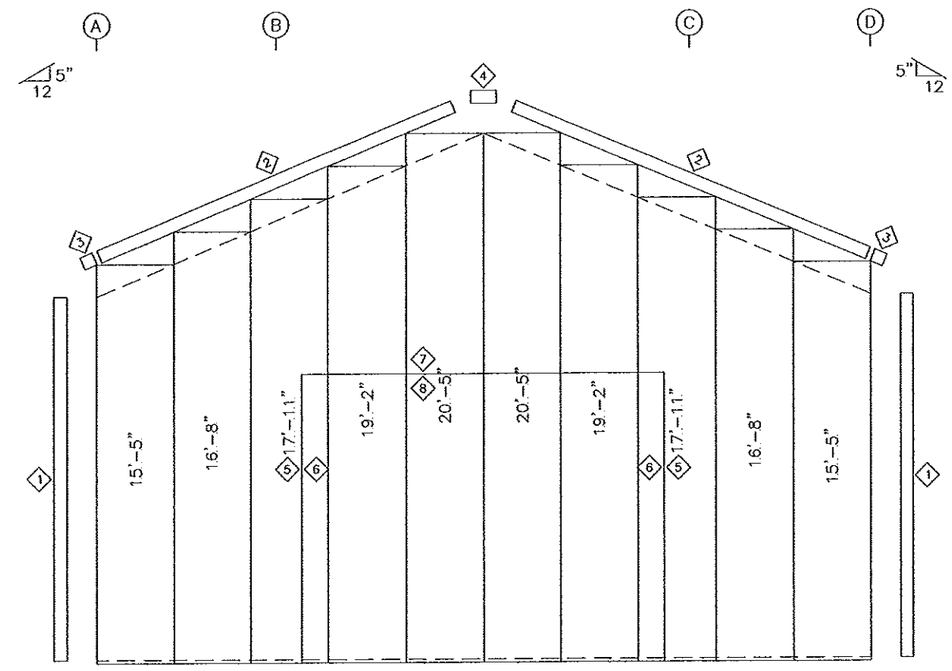

ENDWALL SHEETING & TRIM: FRAME LINE 1

PANELS: 26 Ga. RP. - NEED COLOR

STATE OF MISSOURI
GALES NUMBERS
E-14144
8-23-11
REGISTERED PROFESSIONAL ENGINEER

Wheeler Metals, Inc.				
PROJECT		ENDWALL FRAMING		
ID	MODOT1271.1	DESIGN:	DRAFT:	CHECK:
PROJECT ADDRESS		DATE: 4/11/11	SHEET	OF

BOLT TABLE FRAME LINE 3				
LOCATION	QUAN	TYPE	DIA	LENGTH
ER-3/ER-4	8	A325	5/8"	1 3/4"
Columns/Raf	2	A325	5/8"	1 1/2"
Jamb	2	A325	5/8"	1 1/2"

MEMBER TABLE FRAME LINE 3		
MARK	PART	LENGTH
EC-2	8X25C14	12'-4 15/16"
EC-3	8X25C14	12'-4 15/16"
EC-5	8X25C14	9'-9 1/4"
EC-6	8X25C14	9'-9 1/4"
ER-3	8X25C14	16'-2 3/4"
ER-4	8X25C14	16'-2 3/4"
DJ-1	8X25C14	15'-9 7/8"
DH-1	8X25C14	14'-0"
G-1	8X25Z14	5'-7 1/2"
G-2	8X25Z14	3'-5 5/16"
G-3	8X25Z14	14'-0"
CB-1	0.25_CBL	7'-9"
CB-2	0.25_CBL	9'-11"
CB-3	0.25_CBL	8'-3"

TRIM TABLE FRAME LINE 3		
◇ID	PART	LENGTH
1	CT-110c	14'-6"
2	RT-100d	16'-6"
3	RT-END	1 1/2"
4	PB-100	1'-8"
5	JH-100b	12'-6"
6	JT-100b	12'-6"
7	JH-100c	14'-6"
8	HT-110c	14'-6"

CONNECTION PLATES FRAME LINE 3	
□ID	MARK/PART
1	l1
2	b1

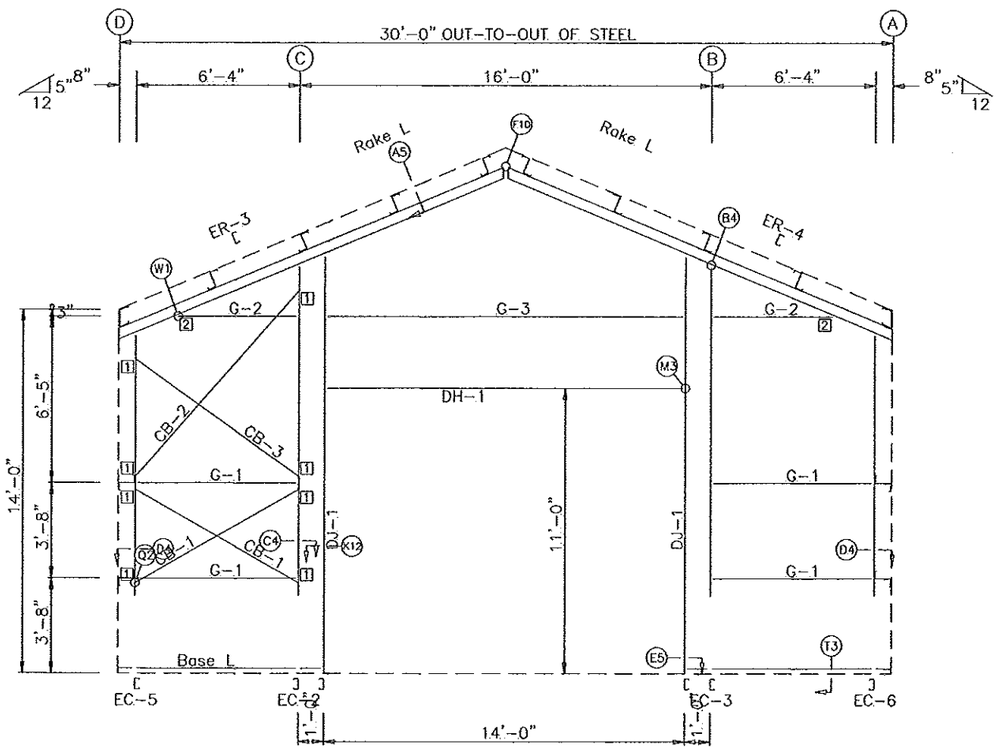

ENDWALL FRAMING: FRAME LINE 3

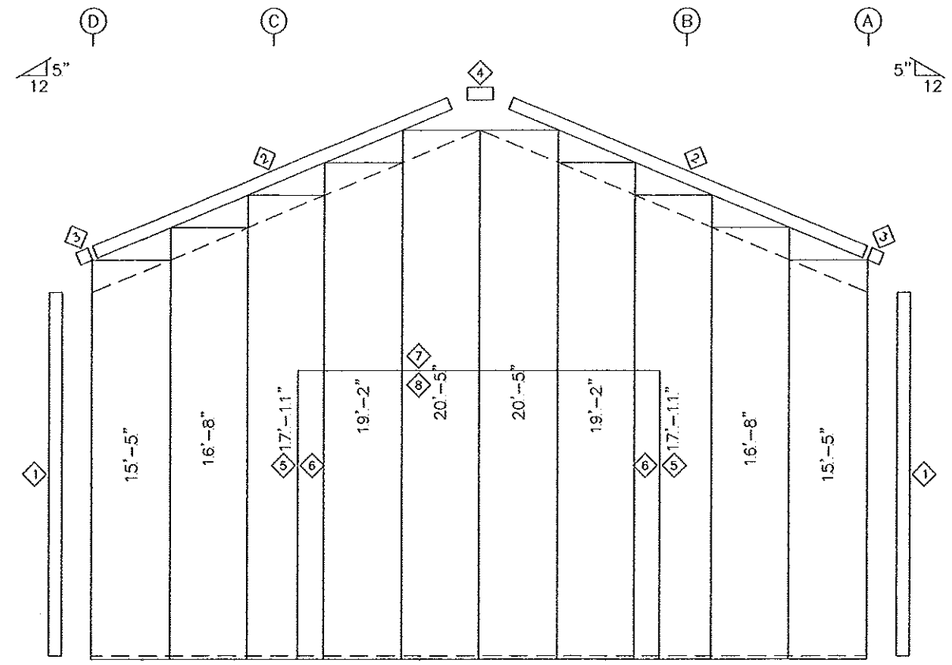

ENDWALL SHEETING & TRIM: FRAME LINE 3

PANELS: 26 Ga. RP - NEED COLOR

STATE OF MISSOURI
CARL DEWAYNE
NUMBERS
E-14144
8-23-11
REGISTERED PROFESSIONAL ENGINEER

Wheeler Metals, Inc.				
PROJECT		ENDWALL FRAMING		
ID	MODOT12711	DESIGN:	DRAFT:	CHECK:
PROJECT		DATE: 4/11/11	SHEET	OF
ADDRESS				

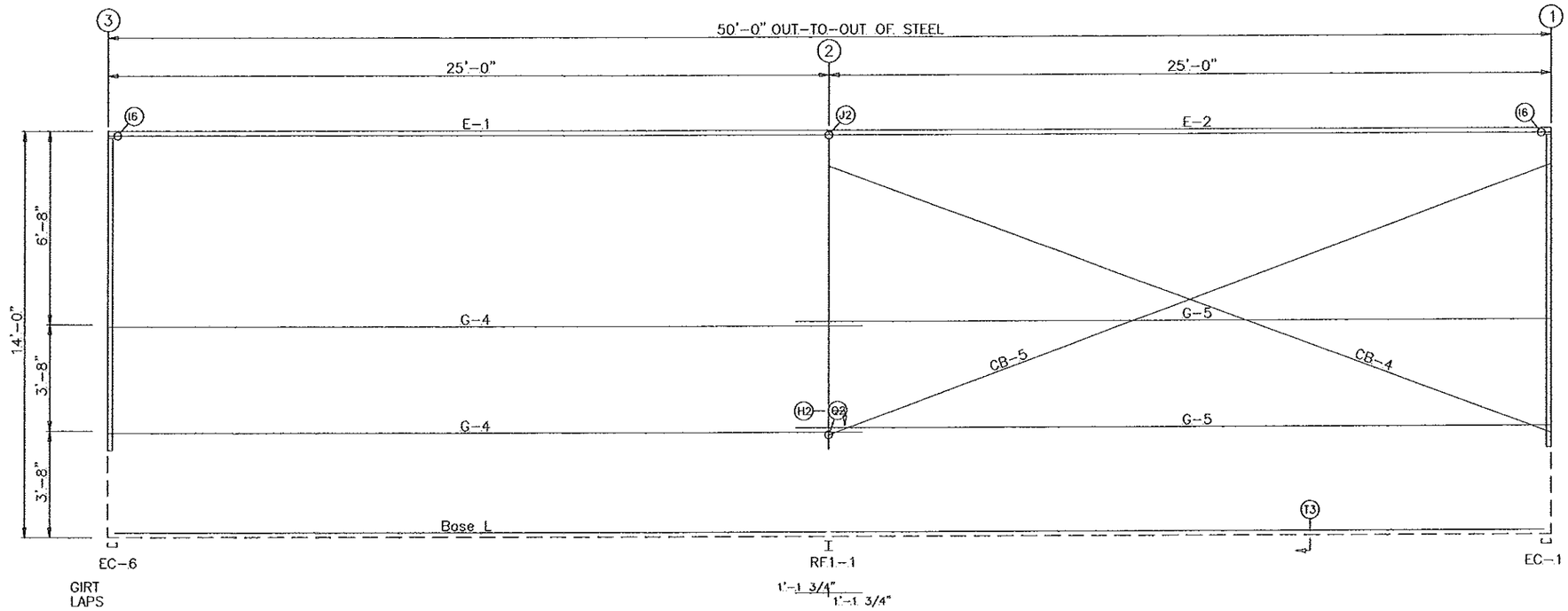

SIDEWALL FRAMING: FRAME LINE A

MEMBER TABLE FRAME LINE A		
MARK	PART	LENGTH
E-1	8ES14L	24'-11 1/2"
E-2	8ES14L	24'-11 1/2"
G-4	8X25Z14	26'-1 1/2"
G-5	8X25Z14	26'-1 1/2"
CB-4	0.25_CBL	26'-9"
CB-5	0.25_CBL	26'-5"

TRIM TABLE FRAME LINE A		
◇ID	PART	LENGTH
1	CT-110c	14'-6"
2	GT-100c	14'-6"
3	GT-100e	18'-6"
4	GT-STRAP	9"
5	GT-END	6"

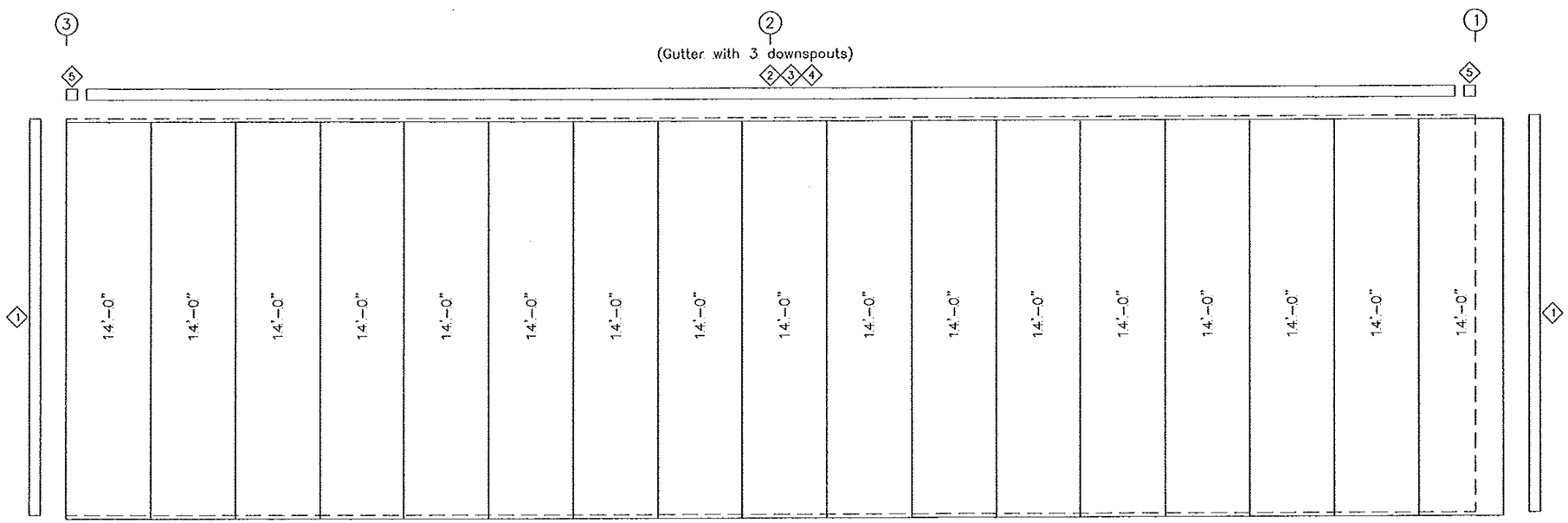

SIDEWALL SHEETING & TRIM: FRAME LINE A

PANELS: 26 Ga. RP – NEED COLOR

STATE OF MISSOURI
CARL DEWAINE GALES NUMBERS
E-14144
8-23-11
REGISTERED PROFESSIONAL ENGINEER

Wheeler Metals, Inc.				
PROJECT		SIDEWALL FRAMING		
ID	MODOT12711	DESIGN:	DRAFT:	CHECK:
PROJECT		DATE: 4/11/11	SHEET	OF
ADDRESS				

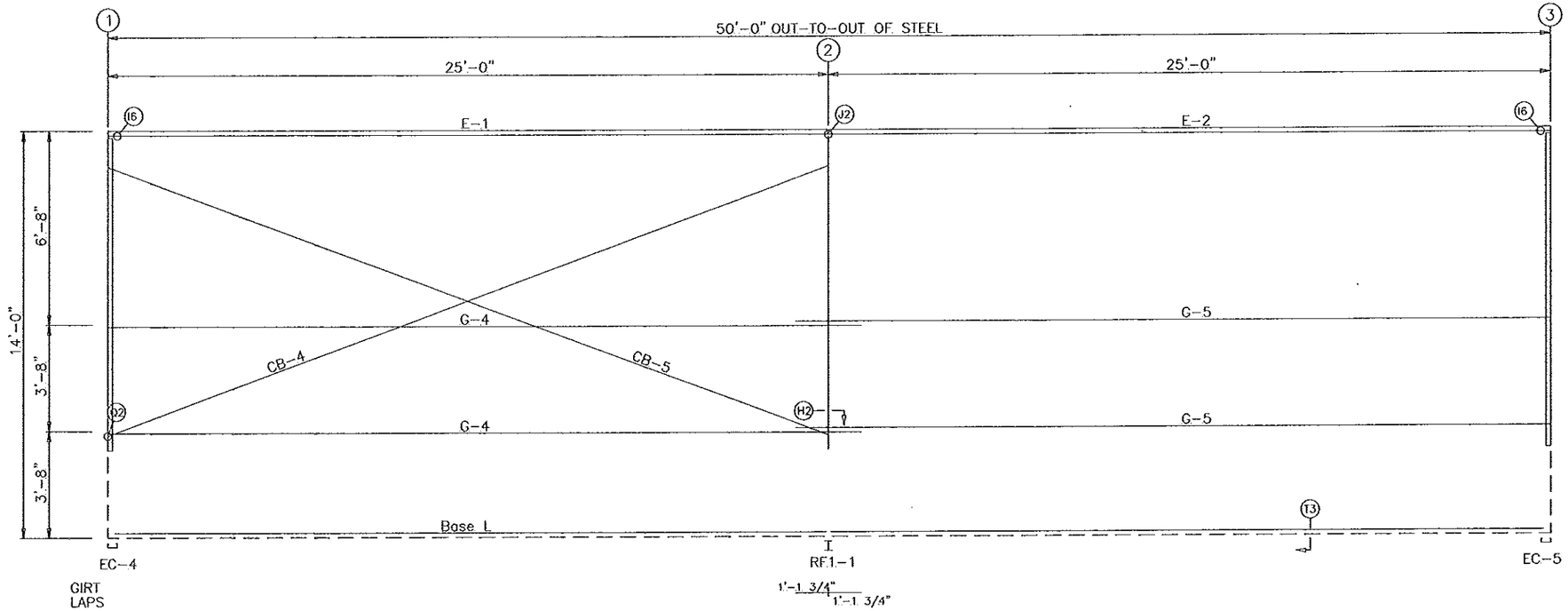

SIDEWALL FRAMING: FRAME LINE D

MEMBER TABLE FRAME LINE D		
MARK	PART	LENGTH
E-1	8ES14L	24'-11 1/2"
E-2	8ES14L	24'-11 1/2"
G-4	8X25Z14	26'-1 1/2"
G-5	8X25Z14	26'-1 1/2"
CB-4	0.25_CBL	26'-9"
CB-5	0.25_CBL	26'-5"

TRIM TABLE FRAME LINE D		
◇ID	PART	LENGTH
1	CT-110c	14'-6"
2	GT-100c	14'-6"
3	GT-100e	18'-6"
4	GT-STRAP	9"
5	GT-END	6"

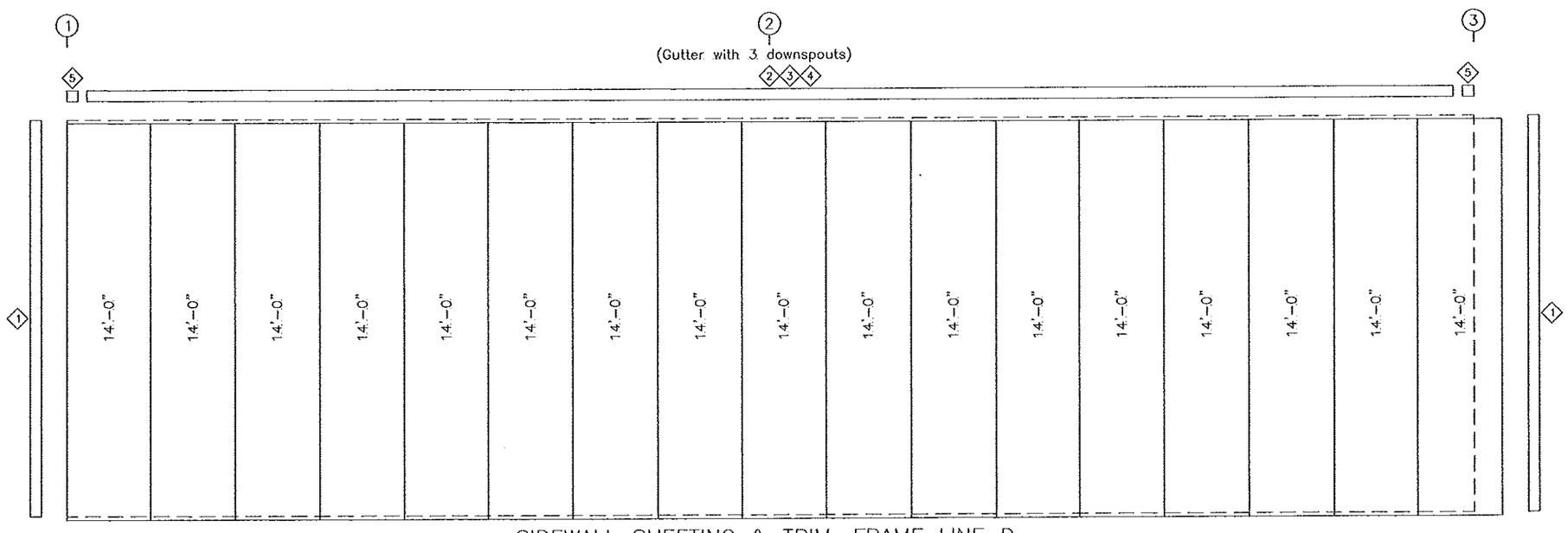

SIDEWALL SHEETING & TRIM: FRAME LINE D

PANELS: 26 Ga. RP -- NEED COLOR

STATE OF MISSOURI
CARL DEWAINE GALES NUMBERS
E-14144
8-23-11
REGISTERED PROFESSIONAL ENGINEER

Wheeler Metals, Inc.				
PROJECT		SIDEWALL FRAMING		
ID	MODOT12711	DESIGN:	DRAFT:	CHECK:
PROJECT		DATE: 4/11/11	SHEET	OF
ADDRESS				

MEMBER TABLE ROOF PLAN		
MARK	PART	LENGTH
P-1	8X25Z14	26'-1 1/2"
P-2	8X25Z14	26'-1 1/2"
E-1	8ES14L	24'-11 1/2"
E-2	8ES14L	24'-11 1/2"
CB-6	0.25_CBL	28'-11"
CB-7	0.25_CBL	28'-9"

CONNECTION PLATES ROOF PLAN	
ID	MARK/PART
1	12

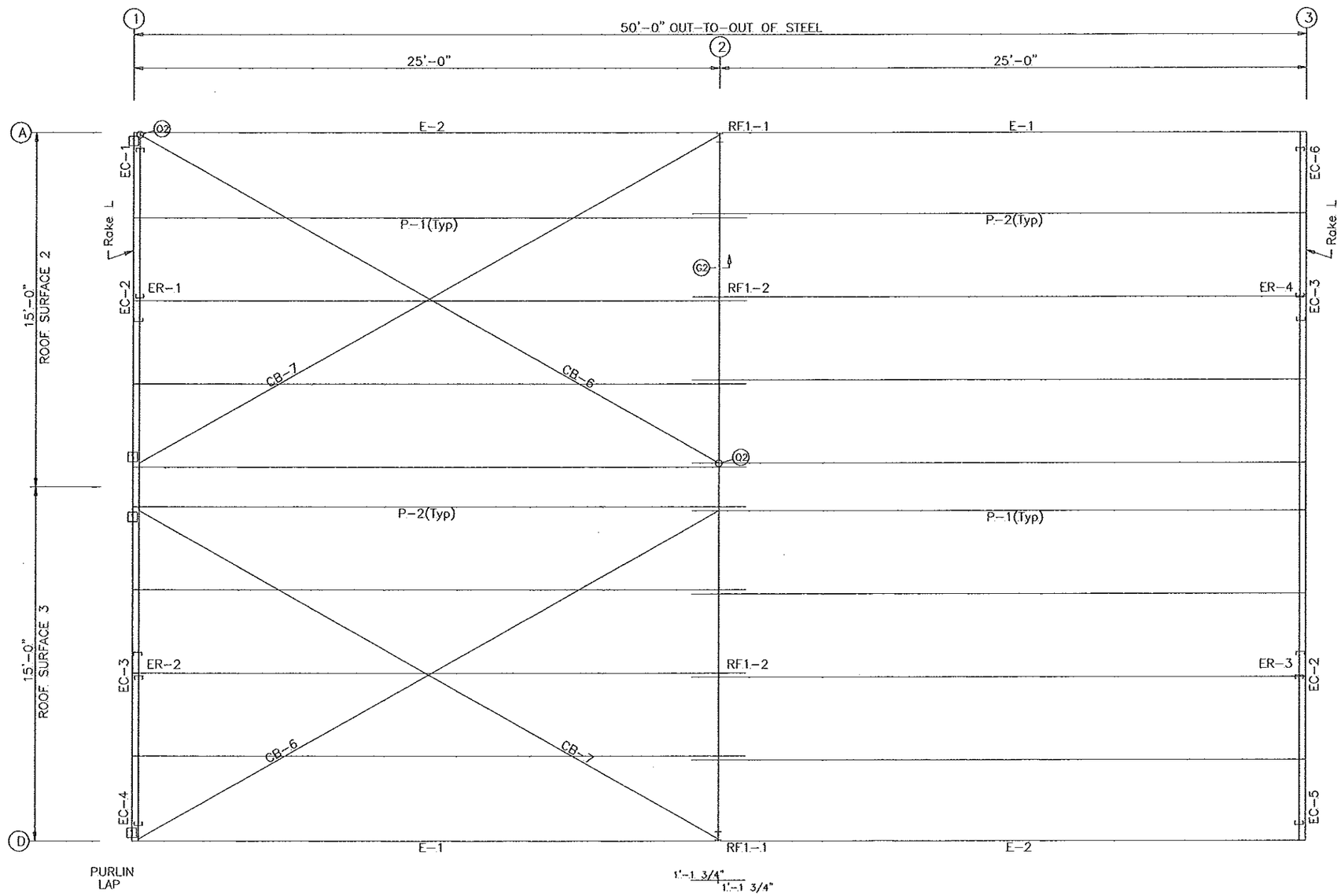

ROOF FRAMING PLAN

STATE OF MISSOURI
GALES NUMBERS
E-14144
8-23-11
REGISTERED PROFESSIONAL ENGINEER

Wheeler Metals, Inc.				
PROJECT		ROOF FRAMING		
ID	MODOT1271.1	DESIGN:	DRAFT:	CHECK:
PROJECT ADDRESS		DATE: 4/11/11	SHEET	OF

TRIM TABLE ROOF PLAN		
ID	PART	LENGTH
1	RC-100	10'-6"

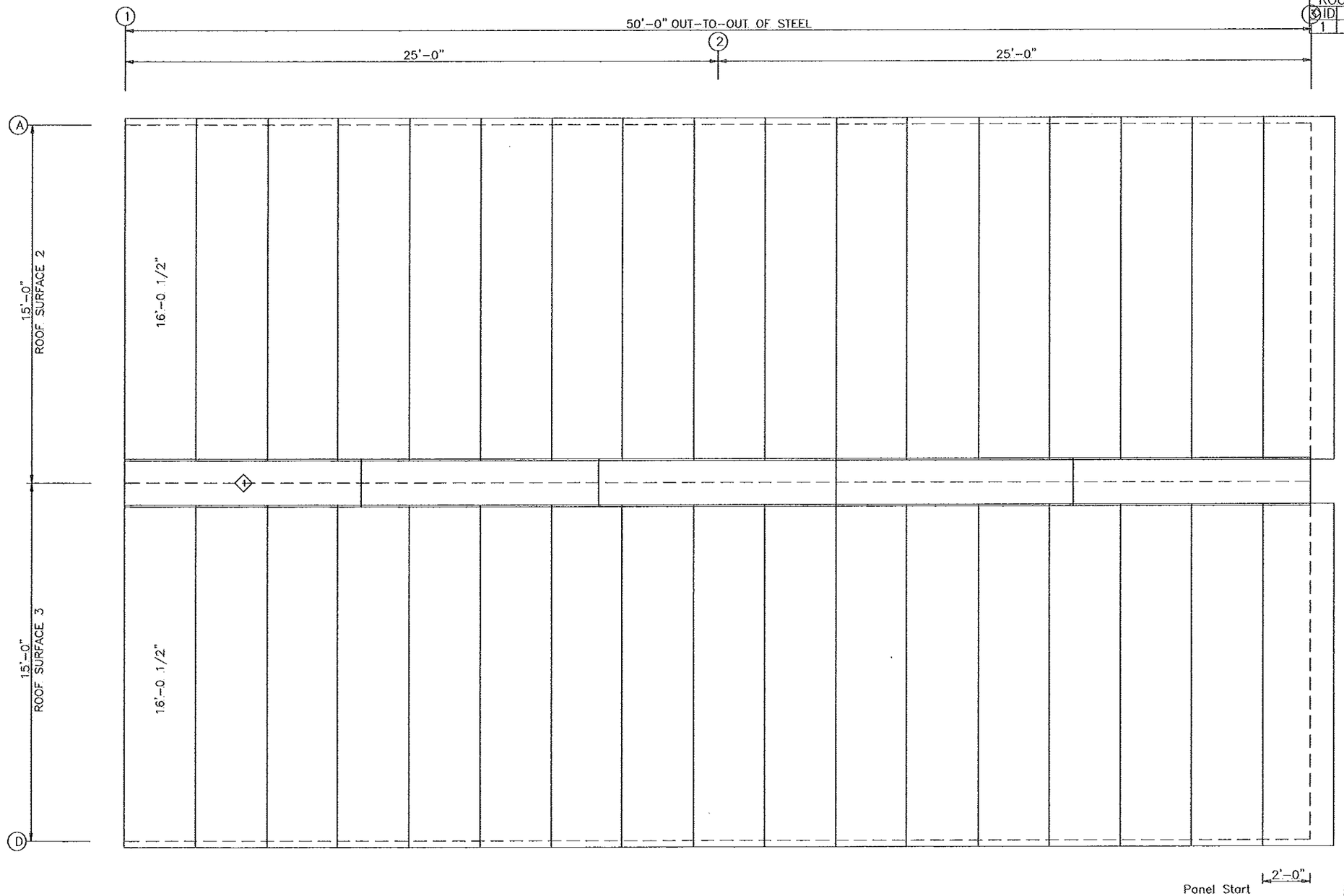

ROOF SHEETING PLAN

PANELS: 26 Ga. RP – NEED COLOR

STATE OF MISSOURI
CHRIS DEWAINE
GALES
NUMBERS
E-14144
8-23-11
REGISTERED PROFESSIONAL ENGINEER

GENERAL NOTES:

ROOF DRAWING TEST NOTES

A

B

B

C

C

Wheeler Metals, Inc.				
PROJECT		ROOF SHEETING		
ID	MODOT.1271.1	DESIGN:	DRAFT:	CHECK:
PROJECT ADDRESS		DATE: 4/11/11	SHEET	OF