Swenson Spreader

A	-	3x3x1/4" Square Tubing
B	-	3x3x1/4"
C	-	3x3x1/4"
D	-	3x3x1/4"
E	-	2 pc. – 2-3/8" O.D. Pipe and 2-7/8 O.D. Pipe
F	-	3x3x1/4"
G	-	4x4x1/4"
H	-	3-1/2x3-1/2x1/4"
I	-	3x4x1/4"
J	-	Caster Wheel

16' Bed 5887 Swenson

Frame on Spreader 16'

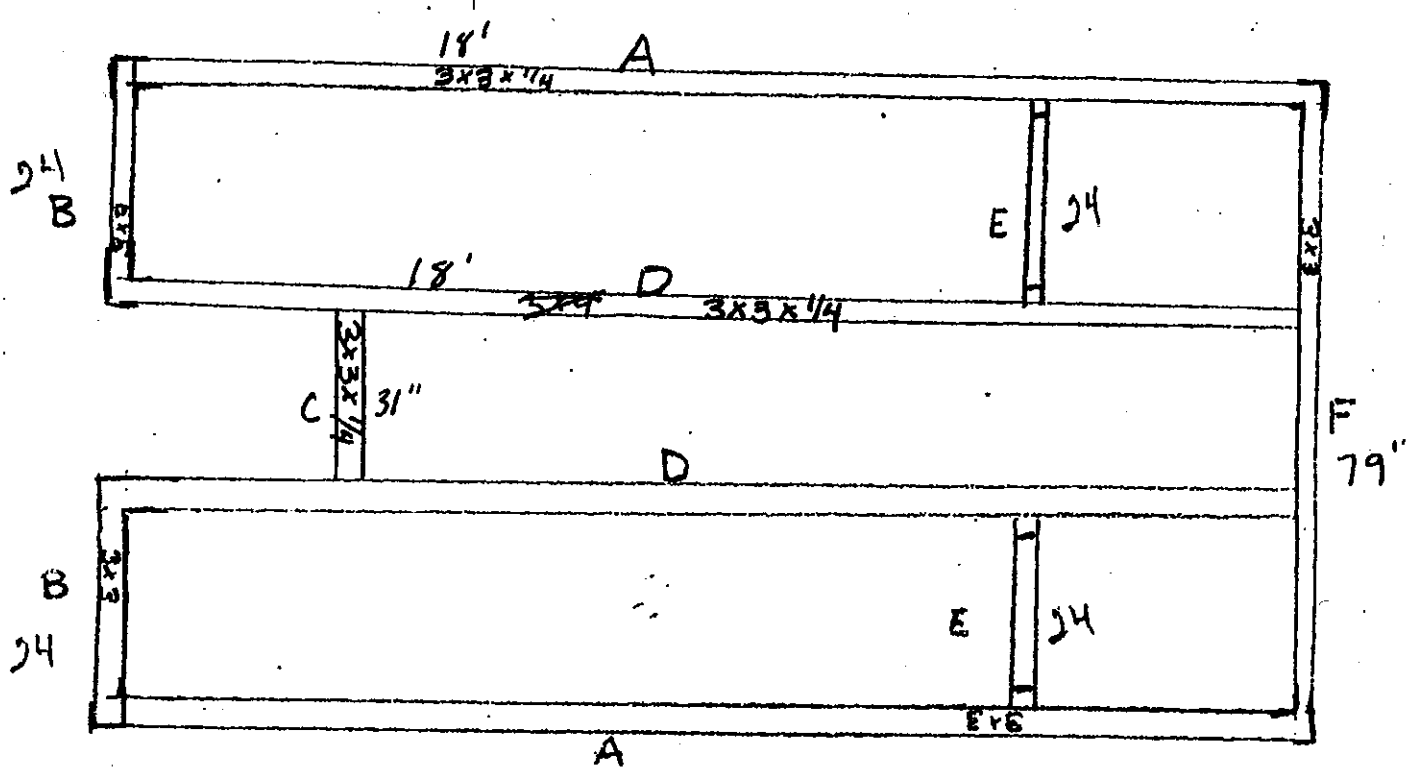

5887

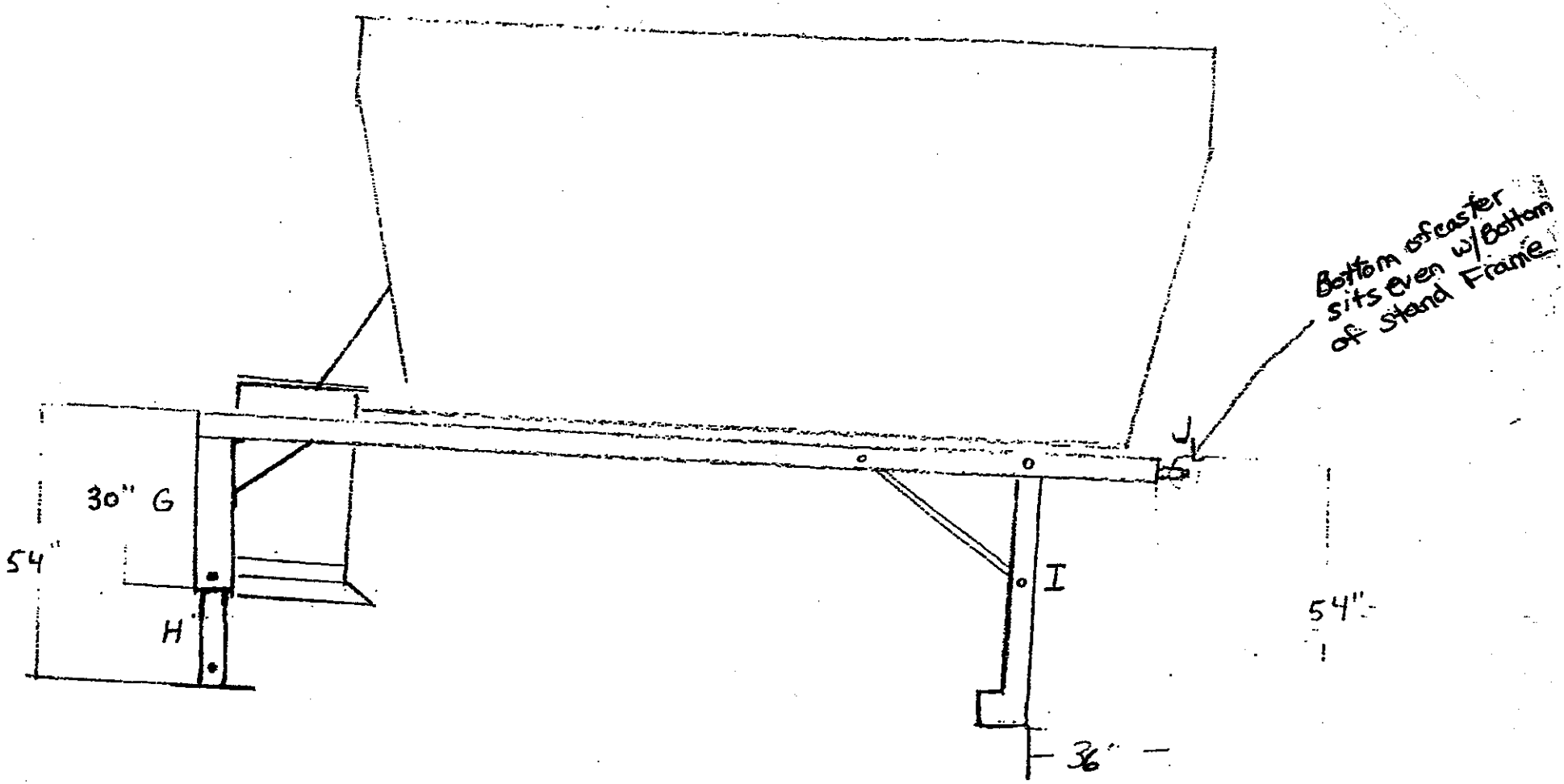
Bottom of caster sits even w/Bottom of Stand Frame
J
30" G
54"
H
I
54"
36"

Flink Spreader

A	-	3x3x1/4" Square Tubing
B	-	3x3x1/4"
C	-	3x3x1/4"
D	-	3x3x1/4"
E	-	2 pc. - 2-3/8" O.D. Pipe and 2-7/8 O.D. Pipe
F	-	3x3x1/4"
G	-	4x4x1/4"
H	-	3-1/2x3-1/2x1/4"
I	-	3x3x1/4"
J	-	Caster Wheel

4270

FLINK

Frame on spreader 84"

use 3x3 Frame

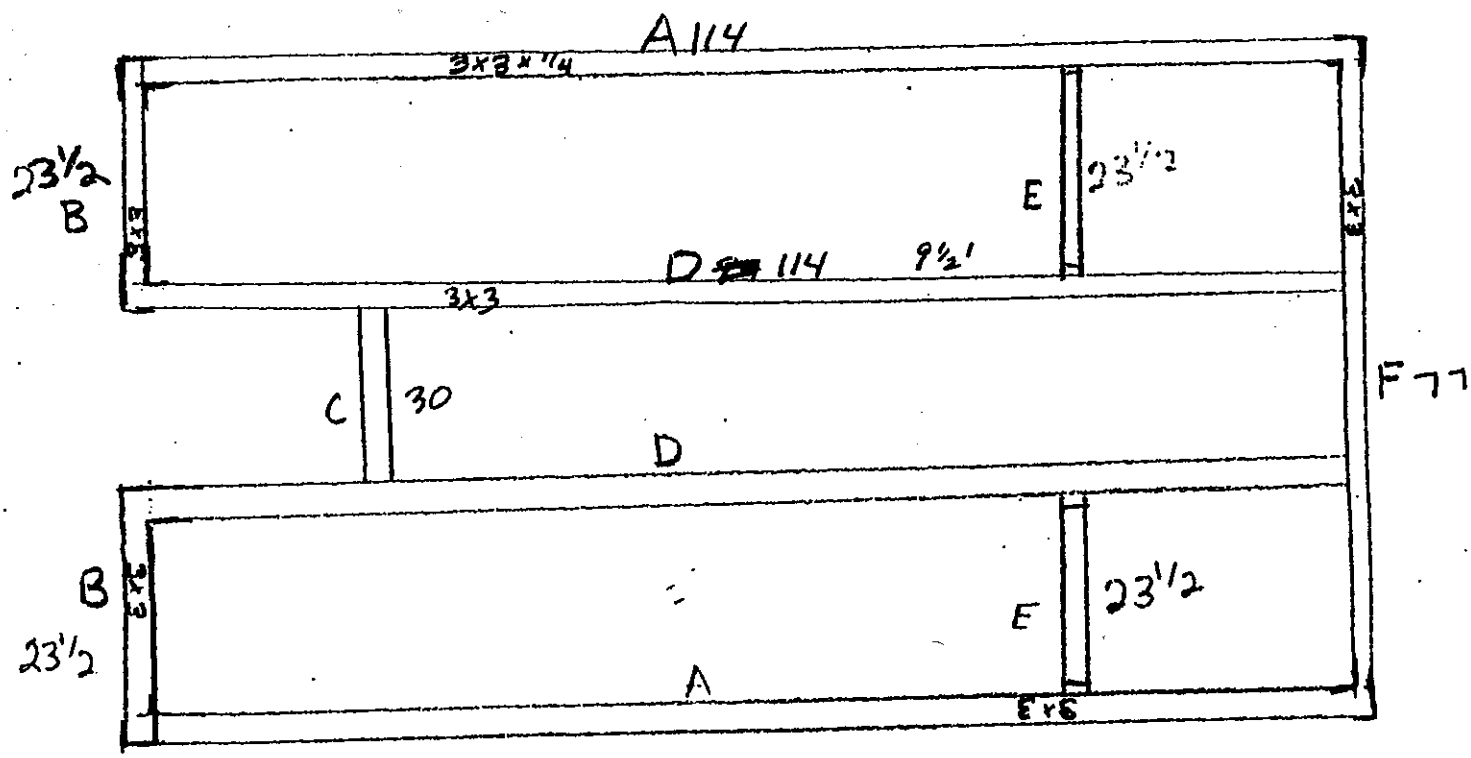

4270

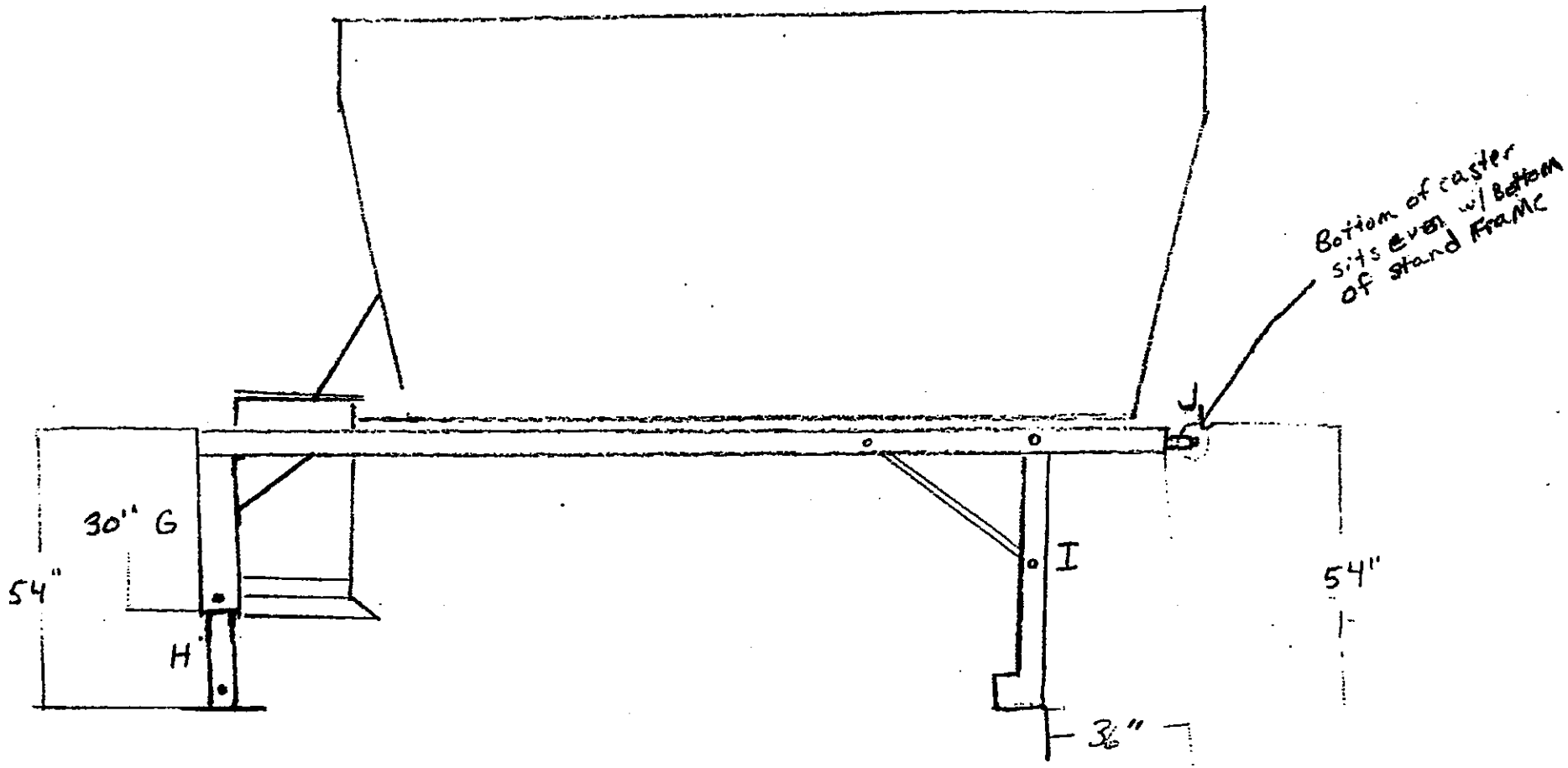
Bottom of caster sits even w/ bottom of stand frame
J
30" G
54"
H
I
54"
3½"