MISSOURI DEPARTMENT OF TRANSPORTATION
BID GUIDELINES AND DOCUMENTATION

REQUEST FOR BID

It is the vendor's responsibility to read and comply with all conditions, specifications, and instructions outlined in this document. This document and any subsequent attachments shall supersede all confirmation forms, receipts, or any other paperwork needed to secure materials, equipment, or services.

TODAY'S DATE: MARCH 29, 2011	**QUOTE DUE BY (DATE AND TIME):** **APRIL 12, 2011 AT 11:00 AM**	F.O.B. REQUIREMENTS: PROJECT LOCATIONS
TO BE COMPLETED NO LATER THAN: MAY 27, 2011	**BID #:** B03-11-0026 THIS NUMBER SHOULD BE REFERENCED ON ALL MAILING LABELS, ENVELOPES, AND ANY OTHER CORRESPONDENCE.	BUYER NAME: TANYA DAUMA, CPPB PHONE: 573-248-2486 FAX: 573-522-6463

District Mailing Address: MoDOT – District 3 PO Box 1067 Hannibal, MO 63401	Project Locations as described below.

ALL BIDS SHOULD BE EXTENDED AND TOTALED. PLEASE LIST COMPLETION TIME.

Item	U/M	SCOPE OF WORK	UNIT PRICE	UNIT PRICE EXTENSION	COMPLETION TIME
Furnish all labor and materials to install concrete salt/chloride containments per specifications and drawings attached at the following maintenance locations:					
1	Lot	Center – 22447 Hwy 19			
1	Lot	Williamsburg – 3949 County Road 1005			
1	Lot	Elsberry –3329 N Hwy 79			
TOTAL ORDER EXTENSION					

All responses to this Request for Bid MUST be submitted on this form and all pages MUST be returned to the Buyer listed above at the District mailing address shown in a sealed envelope.

VENDOR INFORMATION

Missouri Department of Transportation purchase orders must be issued to the invoicing company/address. If the invoicing company/address will be different from that listed in the vendor information section (below), the vendor must also specify the "remit to" company/address.

Vendor Name/Mailing Address:	Vendor Contact Information (including area codes): Phone #: Fax #: Cellular #: Email:
Printed Name and Title of Responsible Officer or Employee:	Signature:

Is your company registered/certified with the State of Missouri as a (please circle):

MINORITY BUSINESS ENTERPRISE (MBE) ?	YES	NO
WOMEN BUSINESS ENTERPRISE (WBE) ?	YES	NO

SALT/CHLORIDE CONTAINMENTS
SPECIFICATIONS

Concrete Strengths:
All compressive strengths 3500 psi @ 29 days.

Concrete Finish:
Exposed form finish should be rubbed down or chip off and smooth fins or other raised areas ¼ inch or more in height. Repair surface defects, including tie holes, immediately after removing the formwork. The contractor shall be responsible for a smooth finishing of all concrete slabs to proper elevation to ensure that all surface moisture will drain freely to the drain.

Testing:
Contractor is to pull one sample from the floor and one from the walls and leave at each location. MoDOT will perform the cylinder testing; contractor shall also provide a designed mix from the batch plant.

Site Work:
It is the responsibility of the contractor to add or cut materials to provide a level site for each containment.

Filling and Backfilling:
Place backfill and fill materials in layers not more than 8" in loose depth. Before compaction, moisten or aerate each layer as necessary to provide the specified moisture content. Compact each layer to required percentage of maximum density for the area.

Shop Drawings/Details:
Attached is a shop drawing "not to scale" that provides additional information. It is the responsibility of the contractor to familiarize themselves with the information before starting the project.

Project Closeout Documents:
The contractor will need to provide FM07A, FM07B, FM39, FM21, FM28 and FM23 if it applies. Affidavit of compliance with the prevailing wage law and certified payroll records before final payment will be made.

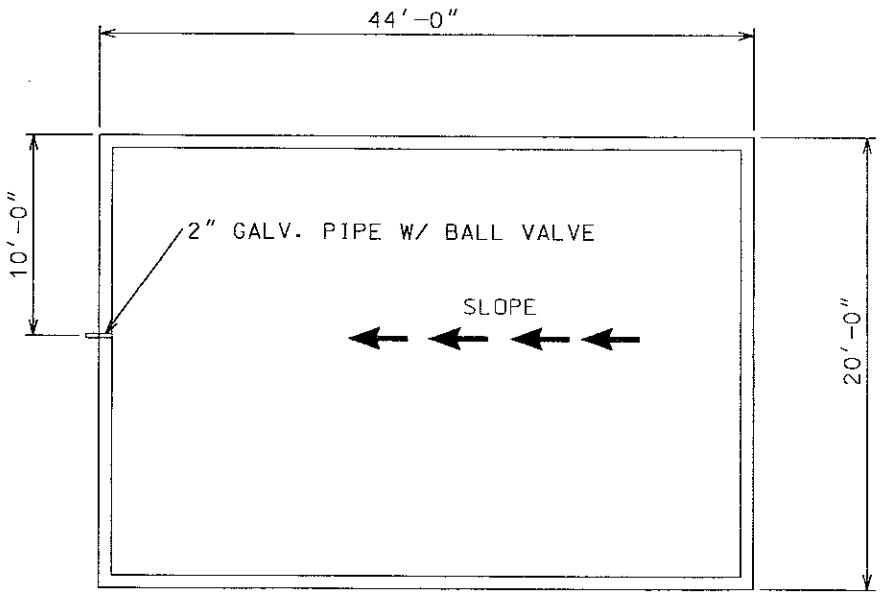

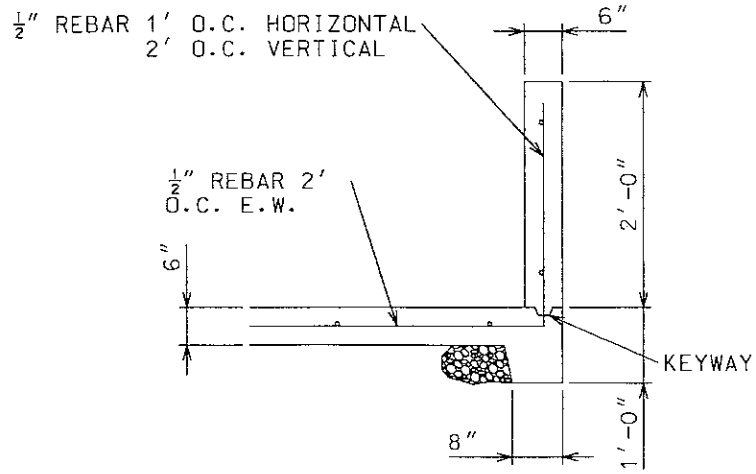

DETAIL A

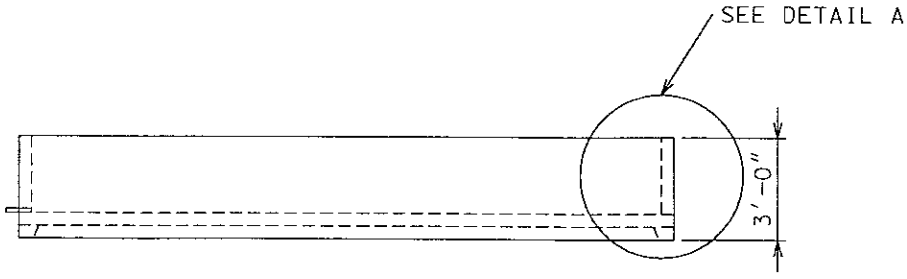

NOTE:
5 1/2 BAG MIX.
FLUSH WALL WITH OUTSIDE OF PAD.
SLOPE PAD ±2" OVER THE LENGTH OF THE PAD
INSTALL 2" GALV. PIPE WITH 2" BALL VALVE FOR DRAIN.
LOCAL BUILDINGS WILL HAVE 1-5000 GAL. & 1-1500 GAL. TANK.
REGIONAL BUILDING WILL HAVE 2-5000 GAL TANKS

NOT TO SCALE

IF A SEAL IS PRESENT ON THIS SHEET IT HAS BEEN ELECTRONICALLY SEALED AND DATED.

PREFERENCE IN PURCHASING PRODUCTS

DATE: _____

The bidders attention is directed to Section 34.076 RsMO 1986 which gives preference to Missouri corporations, firms, and individuals when letting contracts or purchasing products.

Bids/Quotations received will be evaluated on the basis of this legislation.

All vendors submitting a bid/quotation must furnish <u>ALL</u> information requested below.

FOR CORPORATIONS:

State in which incorporated: _____

FOR OTHERS:

State of domicile: _____

FOR ALL VENDORS:

List address of Missouri offices or places of business:

_____

_____

_____

_____

_____

_____

_____

THIS SECTION MUST BE COMPLETED AND SIGNED:

FIRM NAME: _____

ADDRESS: _____

CITY: _____ **STATE:** _____ **ZIP:** _____

BY (signature required): _____

Federal Tax I.D. #: _____ **if no Federal Tax I.D. # - list Social Security #:** _____

NOTE: For bid/quotation to be considered, the "Preference in Purchasing Products" form must be on file in the General Services (Procurement) Division and must be dated in the current calendar year.

MISSOURI DOMESTIC PRODUCTS PROCUREMENT ACT

The bidder's attention is directed to the Missouri Domestic Products Procurement Act, Sections 34.350 to 34/359, RsMO, which requires all manufactured goods or commodities used or supplied in the performance of this contract or any subcontract to be manufactured or produced in the United States.

Section 34.355, RsMO, requires the vendor or contractor to certify his compliance with Section 34.353 and, if applicable, Section 34.359, RsMO, at the time of bidding **and** prior to payment. Failure to comply with Section 34.353, RsMO, during the performance of the contract **and** to provide certification of compliance prior to payment will result in nonpayment for those goods or commodities.

Section 34.353.2, RsMO, specifies that it does not apply where the total contract is less than Twenty-Five Thousand Dollars ($25,000.00). If your total bid is Twenty-Five Thousand Dollars ($25,000.00) or more, you **must** complete this form as directed below.

Failure to complete and return this document with this bid will cause the State to presume the manufactured goods or products listed in the bid are not manufactured or produced in the United States, and the bid will be evaluated on that basis. Please read the certification appearing below on this form.

[ ] If all the goods or products specified in the attached bid which the bidder proposes to supply to the State shall be manufactured or produced in the "United States" as defined in Section 34.350, RsMO, check the box at left.

[ ] If only one item of any particular goods or products specified in the attached bid is manufactured or produced in the "United States" as defined in Section 34.350, RsMO, check the box at left and list the items (or item number) here:
_____
_____

[ ] If any or all of the goods or products specified in the attached bid which the bidder proposes to supply to the State are **not** manufactured or produced in the "United States" as defined in Section 34.350, RsMO, then: (a) check the box at left; (b) list below, by item (or item number), the country other than the United States where each good or product is manufactured or produced; and (c) check the boxes to the left of the paragraphs below if applicable and list the corresponding items (or item numbers) in the spaces provided.

Item (or item number)	Location Where Item Manufactured or Produced

(attach an additional sheet if necessary)

[ ] The following specified goods or products cannot be manufactured or produced in the United States in sufficient quantities or in time to me the contract specifications. Items (or item numbers): _____
_____

[ ] The following specified goods or products must be treated as manufactured or produced in the United States, in accordance with an existing treaty, law, agreement, or regulation of the United States, including a treaty between the United States and any foreign country regarding export-import restrictions or international trade. Items (or item numbers): _____
_____

CERTIFICATION

By submitting this document, completed as directed above, with a bid, the bidder certifies under penalty of making false declaration (Section 575.060, RsMO) that the information contained in this document if true, correct and complete, and may be relied upon by the State in determining the bidders qualifications under and in compliance with the Missouri Domestic Products Procurement Act.

The bidder's failure to complete and return this document with the bid as directed above will cause the State to presume the manufactured goods or products listed in the bid are not manufactured or produced in the United States, and the bid will be evaluated on that basis pursuant to Section 34.353.3(2), RsMO.

MISSOURI SERVICE-DISABLED VETERAN BUSINESS PREFERENCE

By virtue of statutory authority, RSMo 34.074, a preference will be given all contracts for the performance of any job or service to service-disabled veteran business either doing business as Missouri firms, corporations, or individuals; or which maintain Missouri offices or places of business, when the quality of performance promised is equal or better and the price quoted is the same or less or whenever competing bids, in their entirety, are comparable.

Definitions:

Service-Disabled Veteran is defined as any individual who is disabled as certified by the appropriate federal agency responsible for the administration of veterans' affairs.

Service-Disabled Veteran Business is defined as a business concern:

a. Not less than fifty-one (51) percent of which is owned by one or more service-disabled veterans or, in the case of any publicly owned business, not less than fifty-one (51) percent of the stock of which is owned by one or more service-disabled veterans; and
b. The management and daily business operations of which are controlled by one or more service-disabled veterans.

If an offeror meets the definitions of a service-disabled veteran and a service-disabled veteran business as defined in 34.074 RSMo and is either doing business as a Missouri firm, corporation, or individual; or maintains a Missouri office or place of business, the offeror **must** provide the following with the proposal in order to receive the Missouri service-disabled veteran business preference over a non-Missouri service-disabled veteran business when the quality of performance promised is equal or better and the price quoted is the same or less or whenever competing proposals, in their entirety, are comparable:

a. A copy of a letter from the Department of Veterans Affairs (VA), or a copy of the offeror's discharge paper (DD Form 214, Certificate of Release or Discharge from Active Duty) from the branch of service the offeror was in, stating that the offeror has a service-connected disability rating ranging from 0 to 100% disability; and
b. A completed copy of this exhibit

(NOTE: For ease of evaluation, please attach copy of the above-referenced letter from the VA or a copy of the offeror's discharge paper to this Exhibit.)

By signing below, I certify that I meet the definitions of a service-disabled veteran and a service-disabled veteran business as defined in 34.074 RSMo and that I am either doing business as a Missouri firm, corporation, or individual; or maintain Missouri offices or places of business at the location(s) listed below.

Veteran Information	Business Information
Service-Disabled Veteran's Name, (Please Print)	Service-Disabled Veteran Business Name
Service-Disabled Veteran's Signature	Missouri Address of Service-Disabled Veteran Business

STANDARD SOLICITATION PROVISIONS

a. The Missouri Department of Transportation (MoDOT) reserves the right to reject any or all bids/quotes/proposals, and to accept or reject any items thereon, and to waive technicalities. In case of error in the extension of prices in the bid/quote/proposal, unit prices will govern.

b. All bids/quotes/proposals must be signed with the firm name and by a responsible officer or employee. Obligations assumed by such signature must be fulfilled.

c. By virtue of statutory authority, a preference will be given to materials, products, supplies, provisions and all other articles produced, manufactured, made or grown, within the State of Missouri.

d. Time of delivery is a part of the consideration and, if not otherwise stated in the solicitation documents, must be stated in definite terms by the Bidder/Offeror and must be adhered to. If time varies on different items, the Bidder/Offeror shall so state.

e. If providing bids/quotes/proposals for commodities, the Bidder/Offeror will state brand or make on each item. If bidding or proposing other than the make, model or brand specified, the manufacturer's name, model number or catalog number must be given.

f. **For bids/proposals of $25,000** or more, no bids/proposals by telephone, telegram or telefax will be accepted.

g. The date specified for the returning of bids/quotes/proposals is a firm deadline and all bids/quotes/proposals must be received at the designated office by that time. The Department does not recognize the U.S. Mail, Railway Express Agency, Air Express, or any other organization, as its agent for purposes of accepting proposals. All proposals arriving at the designated office after the deadline specified will be rejected.

GENERAL TERMS AND CONDITIONS

General Performance

a. Bidders are encouraged to obtain minority business enterprise (MBE) and women business enterprise (WBE) participation in this work through the use of subcontractors, suppliers, joint ventures, or other arrangements that afford meaningful participation for M/WBEs. Bidders are encouraged to obtain 10% MBE and 5% WBE participation.

b. This work is to be performed under the general supervision and direction of the Missouri Department of Transportation (MoDOT) and, if awarded any portion of the work, the Contractor agrees to furnish at his own expense all labor and equipment required to complete the work, it being expressly understood that this solicitation is for completed work based upon the price(s) specified and is not a solicitation for rental of equipment or employment of labor by MoDOT, and MoDOT is to have no direction or control over the employees used by the Contractor in performance of the work.

Deliveries

a. Unless otherwise specified on the solicitation documents or purchase order, suppliers shall give at least 24 hours advance notice of each delivery. Delivery will only be received between the hours of 8:00 a.m. to 3:00 p.m., Monday through Friday. Material arriving after 3:00 p.m. will not be unloaded until the following workday. No material will be received on Saturday, Sunday or state holidays.

b. If the prices bid herein include the delivery cost of the material, the Contractor agrees to pay all transportation charges on the material as FOB - Destination. Freight costs must be included in the unit price bid and not listed as a separate line item.

c. Any demurrage is to be paid by the Contractor direct to the railroad or carrier.

Nondiscrimination

a. The Contractor shall comply with the Regulations relative to nondiscrimination in federally-assisted programs of the Department of Transportation, Title 49, Code of Federal Regulations, Part 21, as they may be amended from time to time, (hereinafter referred to as the Regulations), which are herein incorporated by reference and made a part of this contract.

b. All solicitations either by competitive bidding or negotiation made by the Contractor for work to be performed under a subcontract, including procurements of materials or leases of the Contractor's obligations under this contract and the Regulations, will be relative to nondiscrimination on the grounds of race, color, or national origin.

1) Sanctions for Noncompliance: In the event of the Contractor's noncompliance with the nondiscrimination provisions of this contract, MoDOT shall impose such contract sanctions as it or the Federal Highway Administration may determine to be appropriate, including, but not limited to:

i. withholding of payments to the Contractor under the contract until the Contractor complies, and/or,

ii. cancellation, termination or suspension of the contract, in whole or in part.

Contract/Purchase Order

a. By submitting a bid/quote/proposal, the Bidder/Offeror agrees to furnish any and all equipment, supplies and/or services specified in the solicitation documents, at the prices quoted, pursuant to all requirements and specifications contained therein.

b. A binding contract shall consist of: (1) the solicitation documents, amendments thereto, and/or Best and Final Offer (BAFO) request(s) with any changes/additions, (2) the Contractor's proposal and/or submitted pricing, and (3) the MHTC's acceptance of the proposal and/or bid by purchase order or post-award contract.

c. A notice of award does not constitute an authorization for shipment of equipment or supplies or a directive to proceed with services. Before providing equipment, supplies and/or services, the Contractor must receive a properly authorized purchase order and/or notice to proceed.

d. The contract expresses the complete agreement of the parties and performance shall be governed solely by the specifications and requirements contained therein. Any change, whether by modification and/or supplementation, must be accomplished by a formal contract amendment signed and approved by and between the duly authorized representative of the Contractor and the duly authorized representative of the MHTC, by a modified purchase order prior to the effective date of such modification. The Contractor expressly and explicitly understands and agrees that no other method and/or no other document, including correspondence, acts, and oral communications by or from any person, shall be used or construed as an amendment or modification.

Subcontracting

a. It is specifically understood that no portion of the material or any interest in the contract, shall be subcontracted, transferred, assigned or otherwise disposed of, except with the written consent of MoDOT. Request for permission to subcontract or otherwise dispose of any part of the work shall be in writing to MoDOT and accompanied by documentation showing that the organization which will perform the work is particularly experienced and equipped for such work.

b. Consent to subcontract or otherwise dispose of any portion of the work shall not be construed to relieve the Contractor of any responsibility for the production and delivery of the contracted work and the completion of the work within the specified time.

c. All payments for work performed by a subcontractor shall be made to the Contractor to whom the contract was awarded and the purchase order issued.

Invoicing and Payment

a. MoDOT is exempt from paying Missouri Sales Tax, Missouri Use Tax and Federal Excise Tax. However, the Contractor may themselves be responsible for the payment of taxes on materials they purchase to fulfill the contract. A Project Tax Exemption Certificate will be furnished to the successful Bidder/Offeror upon request if applicable.

b. Each invoice should be itemized in accordance with items listed on the purchase order and/or contract. The statewide financial management system has been designed to capture certain receipt and payment information. Therefore, each invoice submitted must reference the purchase order number and must be itemized in accordance with items listed on the purchase order. Failure to comply with this requirement may delay processing of invoices for payment.

c. Unless otherwise provided for in the solicitation documents, payment for all equipment, supplies, and/or services required herein shall be made in arrears. The Missouri Highways and Transportation Commission (MHTC) shall not make any advance deposits.

d. The MHTC assumes no obligation for equipment, supplies, and/or services shipped or provided in excess of the quantity ordered. Any authorized quantity is subject to the MHTC's rejection and shall be returned at the Contractor's expense.

e. The MHTC reserves the right to purchase goods and services using the state-purchasing card.

Applicable Laws and Regulations

a. The contract shall be construed according to the laws of the State of Missouri. The Contractor shall comply with all local, state, and federal laws and regulations related to the performance of the contract.

b. The Contractor must be registered and maintain good standing with the Secretary of State of the State of Missouri and other regulatory agencies, as may be required by law or regulations. Prior to the issuance of a purchase order and/or notice to proceed, the Contractor may be required to submit to MoDOT a copy of their current Authority Certificate from the Secretary of State of the State of Missouri.

   1) Prior to the issuance of a purchase order and/or notice to proceed, all **out-of-state** Contractors **providing services** within the state of Missouri must submit to MoDOT a copy of their current Transient Employer Certificate from the Department of Revenue, in addition to a copy of their current Authority Certificate from the Secretary of State of the State of Missouri.

c. The exclusive venue for any legal proceeding relating to or arising, out of the contract shall be in the Circuit Court of Cole County, Missouri.

Executive Order

a. The Contractor shall comply with all the provisions of Executive Order 07-13, issued by the Honorable Matt Blunt, Governor of Missouri, on the sixth (6th) day of March, 2007. This Executive Order, which promulgates the State of Missouri's position to not tolerate persons who contract with the state engaging in or supporting illegal activities of employing individuals who are not eligible to work in the United States, is incorporated herein by reference and made a part of this Agreement.

   1) "By signing this Agreement, the Contractor hereby certifies that any employee of the Contractor assigned to perform services under the contract is eligible and authorized to work in the United States in compliance with federal law."

   2) In the event the Contractor fails to comply with the provisions of the Executive Order 07-13, or in the event the Commission has reasonable cause to believe that the contractor has knowingly employed individuals who are not eligible to work in the United States in violation of federal law, the Commission reserves the right to impose such contract sanctions as it may determine to be appropriate, including but not limited to contract cancellation, termination or suspension in whole or in part or both.

   3) The Contractor shall include the provisions of this paragraph in every subcontract. The Contractor shall take such action with respect to any subcontract as the Commission may direct as a means of enforcing such provisions, including sanctions for noncompliance.

Preferences

a. In the evaluation of bids/quotes/proposals, preferences shall be applied in accordance with Chapter 34 RSMo. Contractors should apply the same preferences in selecting subcontractors.

b. By virtue of statutory authority, RSMo. 34.076 and 34.350 to 34.359, a preference will be given to materials, products, supplies, provisions and all other articles produced, manufactured, made or grown within the State of Missouri. Such preference shall be given when quality is equal or better and delivered price is the same or less.

   1) If attached, the document entitled **"PREFERENCE IN PURCHASING PRODUCTS"** should be completed and returned with the solicitation documents.

   2) If attached, the document entitled **"MISSOURI DOMESTIC PRODUCTS PROCUREMENT ACT"** should be completed and returned with the solicitation documents**. Applies if bid is Twenty-Five Thousand Dollars ($25,000.00) or more.**

c. By virtue of statutory authority, RSMo 34.074, a preference will be given all contracts for the performance of any job or service to service-disabled veteran business either doing business as Missouri firms, corporations, or individuals; or which maintain Missouri offices or places of business, when

the quality of performance promised is equal or better and the price quoted is the same or less or whenever competing bids, in their entirety, are comparable.

1) If attached, the document entitled **"MISSOURI SERVICE-DISABLED VETERAN PREFERENCE"** should be completed and returned with the solicitation documents.

d. In the event of a tie of low bids, the MHTC reserves the right to establish the method to be used in determining the award

Remedies and Rights

a. No provision in the contract shall be construed, expressly or implied, as a waiver by the MHTC of any existing or future right and/or remedy available by law in the event of any claim by the MHTC of the Contractor's default or breach of contract.
b. The Contractor agrees and understands that the contract shall constitute an assignment by the Contractor to the MHTC of all rights, title and interest in and to all causes of action that the Contractor may have under the antitrust laws of the United States or State of Missouri for which causes of action have accrued or will accrue as the result of or in relation to the particular equipment, supplies, and/or services purchased or produced by the Contractor in the fulfillment of the contract with the MHTC.
c. In the event a Contractor becomes involved in, or is threatened with, litigation with a subcontractor or supplier as a result of such direction, the Contractor may request MoDOT to enter into such litigation to protect the interests of the MHTC, and, in addition, the Contractor may request the United States to enter into such litigation to protect the interests of the United States.

Cancellation of Contract

a. The MHTC may cancel the contract at any time for a material breach of contractual obligations or for convenience by providing the Contractor with written notice of cancellation. Should the MHTC exercise its right to cancel the contract for such reasons, cancellation will become effective upon the date specified in the notice of cancellation sent to the Contractor.
b. If the MHTC cancels the contract for breach, the MHTC reserves the right to obtain the equipment, supplies, and/or services to be provided pursuant to the contract from other sources and upon such terms and in such manner as the MHTC deems appropriate and charge the Contractor for any additional costs incurred thereby.

Bankruptcy or Insolvency

a. Upon filing for any bankruptcy or insolvency proceeding by or against the Contractor, whether voluntary or involuntary, or upon the appointment of a receiver, trustee, or assigned the benefit or creditors, the Contractor must notify MoDOT immediately. Upon learning of any such actions, the MHTC reserves the right, at its sole discretion, to either cancel the contract or affirm the contract and hold the Contractor responsible for damages.

Inventions, Patents, and Copyrights

a. The Contractor shall defend, protect, and hold harmless the MHTC, its officers, agents, and employees against all suits of law or in equity resulting from patent and copyright infringement concerning the Contractor's performance or products produced under the terms of the contract.

Inspection and Acceptance

a. No equipment, supplies, and/or services received by MoDOT pursuant to a contract shall be deemed accepted until MoDOT has had reasonable opportunity to inspect said equipment, supplies, and/or services.

b. All equipment, supplies, and/or services which do not comply with the specifications and/or requirements or which are otherwise unacceptable or defective may be rejected. In addition, all equipment, supplies, and/or services which are discovered to be defective or which do not conform to any warranty of the Contractor upon inspection (or at any later time if the defects contained were not reasonably ascertainable upon the initial inspection) may be rejected.

c. The MHTC reserves the right to return any such rejected shipment at the Contractor's expense for full credit or replacement and to specify a reasonable date by which replacements must be received.

d. The MHTC's right to reject any unacceptable equipment, supplies, and/or services shall not exclude any other legal, equitable or contractual remedies the MHTC may have.

Warranty

a. The Contractor expressly warrants that all equipment, supplies, and/or services provided shall: (1) conform to each and every specification, drawing, sample or other description which was furnished to or adopted by MoDOT, (2) be fit and sufficient for the purpose expressed in the solicitation documents, (3) be merchantable, (4) be of good materials and workmanship, and (5) be free from defect.

b. Such warranty shall survive delivery and shall not be deemed waived either by reason of the MHTC's acceptance of or payment for said equipment, supplies, and/or services.

Status of Independent Contractor

a. The Contractor represents itself to be an independent Contractor offering such services to the general public and shall not represent itself or its employees to be an employee of the MHTC. Therefore, the Contractor shall assume all legal and financial responsibility for taxes, FICA, employee fringe benefits, workers' compensation, employee insurance, minimum wage requirements, overtime, etc., and agrees to indemnify, save and hold the MHTC, its officers, agents and employees harmless from and against any and all losses (including attorney fees) and damage of any kind related to such matters.

Indemnification

a. The Offeror shall defend, indemnify and hold harmless the Commission, including its members and department employees, from any claim or liability whether based on a claim for damages to real or personal property or to a person for any matter relating to or arising out of the Offeror's performance of its obligations under this Agreement.

SPECIAL TERMS AND CONDITIONS

Insurance

The Contractor shall maintain or cause to be maintained at Contractor's own expense commercial general liability, automobile liability, worker's compensation insurance against negligent acts, errors or omissions of the Contractor, or its subcontractors and anyone directly or indirectly employed by

any of them. Any insurance policy required as specified in this Section shall be written by a company that is licensed and authorized to issue such insurance in the state of Missouri and shall provide insurance coverage for not less than the following limits of liability:

a. General Liability: Not less than $500,000 for any one person in a single accident or occurrence, and not less than $3,000,000 for all claims arising out of a single occurrence;

b. Automobile Liability: Not less than $500,000 for any one person in a single accident or occurrence, and not less than $3,000,000 for all claims arising out of a single occurrence;

c. Missouri State Workmen's Compensation policy or equivalent in accordance with state law.

Upon request from the Commission, the Contractor shall provide the Commission with certificates of insurance evidencing the required coverage and that such insurance is in effect.

Information and Reports

a. The Contractor shall provide all information and reports required by the Regulations, or Directives issued pursuant thereto, and shall permit access to its books, records, accounts, other sources of information, and its facilities as may be determined by the Missouri Department of Transportation or the Federal Highway Administration to be pertinent to ascertain compliance with such Regulations or Directives. Where any information required of a Contractor is in the exclusive possession of another who fails or refuses to furnish this information the Contractor shall so certify to the Missouri Department of Transportation, or the Federal Highway Administration as appropriate, and shall set forth what efforts it has made to obtain the information.

Prevailing Wage

a. If the bid/quote/proposal is accepted, the vendor will be required to comply with the prevailing wages as fixed by the Missouri Department of Labor and Industrial Relations, in effect as of the date of the issuance of the solicitation, for each affected craft and type of workmen in the following county(ies): Ralls, Callaway, Lincoln. The Annual Wage Order #17 may be inspected at any District Office or at the Central Office in Jefferson City, MO.

b. The Contractor shall submit notarized weekly payroll affidavit documentation included with the project request for payment. The successful vendor must provide a lien waiver from all material suppliers.

Permits, Licenses and Safety Issues

a. The contract price shall include any necessary permits and licenses required by law incidental to the work. Local ordinances requiring building permits are not applicable to state agencies.

b. The Contractor will comply with local laws involving safety in the prosecution of the work.

Award

a. Award of this bid/quote/proposal will be made on an "All Or Nothing" basis using the "lowest and best" principle of award.

Delivery – Additional Requirements

a. The Contractor shall furnish the Missouri Department of Transportation with a planned project schedule at least 24 hours before starting.

   1) Notification should be during the normal workday preceding the day on which the Contractor desires to initiate project.

   2) It will be necessary for a representative of the Missouri Department of Transportation to be present when the material is delivered.

b. No work will be made on **Saturdays, Sundays and holidays** unless specifically authorized by the engineer.

c. The following days shall be construed as **official holidays** under the terms of the contract:

May 8	Truman's Birthday
Last Monday in May	Memorial Day

Liquidated Damages

a. In the event the successful Contractor fails to deliver the material within the time specified, the Department and the public will sustain damages because of such delay in delivery, the exact extent of which would be difficult to ascertain, and in order to liquidate such damage in advance it is agreed that the **sum of one-hundred dollars ($100.00) per day, per item,** for each assessable calendar day on which the delivery has not been completed, is reasonable and the best estimate which the parties can arrive at as liquidated damages, and it is therefore agreed that said amount will be withheld from payments due the Contractor or otherwise collected from the Contractor as liquidated damages.

b. **Saturdays, Sundays, holidays and days whereas the Department has suspended work** shall not be assessable days.

Prohibition Of Employment Of Unauthorized Aliens:

a. Pursuant to RSMo 285.530 (1), no business entity or employer shall knowingly employ, hire for employment, or continue to employ an unauthorized alien to perform work within the state of Missouri. As a condition for the award of any contract or grant in excess of five thousand dollars by the state or by any political subdivision of the state to a business entity, or for any business entity receiving a state-administered or subsidized tax

credit, tax abatement, or loan from the state, the business entity shall, by sworn affidavit and provision of documentation, affirm its enrollment and participation in a federal work authorization program with respect to the employees working in connection with the contracted services. Every such business entity shall sign an affidavit affirming that it does not knowingly employ any person who is unauthorized alien in connection with the contracted services. [RSMO 285.530 (2)] A copy of the affidavit referenced above is provided within this document.

E-Verify is an example of a federal work authorization program. Acceptable enrollment and participation documentation consists of **completed** copy of the E-Verify Memorandum of Understanding (MOU). For vendors that are not already enrolled and participating in a federal work authorization program, E-Verify is available at http://www.dhs.gov/files/programs/gc_1185221678150.shtm

Construction Safety Program

a. Missouri law, 292.675 RSMo, requires the awarded Contractor and its subcontractor(s) to provide a ten-hour occupational safety and health administration (OSHA) construction safety program (or a similar program approved by the Missouri Department of Labor and Industrial Relations as a qualified substitute) for their on-site employees (laborers, workmen, drivers, equipment operators, and craftsmen) who have not previously completed such a program and are directly engaged in actual construction of the improvement (or working at a nearby or adjacent facility used for construction of the improvement). The Contractor and its subcontractor(s) shall require all such employees to complete this ten-hour program, pursuant to 292.675 RSMo, unless they hold documentation on their prior completion of said program. Penalties for non-compliance include Contractor forfeiture to the Commission in the amount of $2,500, plus $100 per contractor and subcontractor employee for each calendar day such employee is employed beyond the elapsed time period for required program completion under 292.675 RSMo.

APPLICANT AFFIDAVIT FOR SOLE-PROPRIETORSHIP OR PARTNERSHIP
(a separate affidavit is required for each owner and general partner)

STATE OF _____)
) ss
COUNTY OF _____)

On this _____ day of _____, 20_____, before me appeared _____, personally known to me or proved to me on the basis of satisfactory evidence to be the person whose name is subscribed to the within instruments, who being by me duly sworn, deposed as follows:

My name is _____, and I am of sound mind, capable of making this affidavit, and personally certify the facts herein stated, as required by Section 208.009, RSMo, for failure to provide affirmative proof of lawful presence in the United States of America:

I am the _____ of _____, which is applying for a public benefit
owner or partner business name
(grant, contract, and/or loan) administered/provided by the Missouri Highways and Transportation Commission (MHTC), acting by and through the Missouri Department of Transportation (MoDOT).

I am classified by the United States of America as: (check the applicable box)

❑ a United States citizen. ❑ an alien lawfully admitted for permanent residence.

I am aware that Missouri law provides that any person who obtains any public benefit by means of a willfully false statement or representation, or by willful concealment or failure to report any fact or event required to be reported, or by other fraudulent device, shall be guilty of the crime of stealing pursuant to Section 570.030, RSMo, which is a Class C felony for stolen public benefits valued between $500 and $25,000 (punishable by a term of imprisonment not to exceed 7 years and/or a fine not more than $5,000 – Sections 558.011 and 560.011, RSMo), and is a Class B felony for stolen public benefits valued at $25,000 or more (punishable by a term of imprisonment not less than 5 years and not to exceed 15 years – Section 558.011, RSMo).

I recognize that, upon proper submission of this sworn affidavit, I will only be eligible for temporary public benefits until such time as my lawful presence in the United States is determined, or as otherwise provided by Section 208.009, RSMo.

I understand that Missouri law requires MHTC/MoDOT to provide assistance in obtaining appropriate documentation to prove citizenship or lawful presence in the United States, and I agree to submit any requests for such assistance to MHTC/MoDOT in writing.

I acknowledge that I am signing this affidavit as a free act and deed and not under duress.

_____ _____
Affiant Signature Affiant's Social Security Number or Applicable Federal Identification Number

Subscribed and sworn to before me this _____ day of _____, 20_____.

_____
Notary Public

My commission expires:

ANNUAL WORKER ELIGIBILITY VERIFICATION AFFIDAVIT
(for joint ventures, a separate affidavit is required for each business entity)

STATE OF _____)
) ss
COUNTY OF _____)

On the _____ day of _____, 20____, before me appeared _____,
Affiant name
personally known to me or proved to me on the basis of satisfactory evidence to be a person whose name is subscribed to this affidavit, who being by me duly sworn, stated as follows:

- I, the Affiant, am of sound mind, capable of making this affidavit, and personally certify the facts herein stated, as required by Section 285.530, RSMo, to enter into any contract agreement with the state to perform any job, task, employment, labor, personal services, or any other activity for which compensation is provided, expected, or due, including but not limited to all activities conducted by business entities.
- I, the Affiant, am the _____ of _____, and I am duly authorized, directed, and/or empowered to act officially and properly on behalf of this business entity.
  title business name
- I, the Affiant, hereby affirm and warrant that the aforementioned business entity is enrolled in a federal work authorization program operated by the United States Department of Homeland Security, and the aforementioned business entity shall participate in said program to verify the employment eligibility of newly hired employees working in connection with any services contracted by the Missouri Highways and Transportation Commission (MHTC). I have attached documentation to this affidavit to evidence enrollment/participation by the aforementioned business entity in a federal work authorization program, as required by Section 285.530, RSMo.
- I, the Affiant, also hereby affirm and warrant that the aforementioned business entity does not and shall not knowingly employ, in connection with any services contracted by MHTC, any alien who does not have the legal right or authorization under federal law to work in the United States, as defined in 8 U.S.C. § 1324a(h)(3).
- I, the Affiant, am aware and recognize that, unless certain contract and affidavit conditions are satisfied pursuant to Section 285.530, RSMo, the aforementioned business entity may be held liable under Sections 285.525 though 285.550, RSMo, for subcontractors that knowingly employ or continue to employ any unauthorized alien to work within the state of Missouri.
- I, the Affiant, acknowledge that I am signing this affidavit as a free act and deed of the aforementioned business entity and not under duress.

_____
Affiant Signature

Subscribed and sworn to before me in _____, _____, the day and year first above-written.
city (or county) state

_____
Notary Public

My commission expires:

[documentation of enrollment/participation in a federal work authorization program attached]