MISSOURI DEPARTMENT OF TRANSPORTATION
INFORMAL QUOTE GUIDELINES AND DOCUMENTATION
FOR PURCHASES $3,000 TO $24,999.99
THIS IS NOT AN ORDER

REQUEST FOR INFORMAL QUOTATION

Please quote the lowest prices covering material specified and provide all information requested.

TODAY'S DATE:	10-07-2009	QUOTE DUE BY:	10-14-2009 BY 1:00 PM CST	F.O.B. REQUIREMENTS:	DESTINATION
TO BE COMPLETED NO LATER THAN:	11-01-2009	QUOTATION NO:	Q4-09-044	BUYER NAME /TELEPHONE NUMBER:	ROBIN WARREN 816-622-0054
District Mailing Address/Facsimile #:	600 NE COLBERN ROAD LEE'S SUMMIT, MO 64086 **FAX – 816-622-0070**		Project Location:	As Indicated in Attached Drawings	

Quantity	U/M	DESCRIPTION (including size and/or part #'s)	UNIT PRICE	UNIT PRICE EXTENSION	DELIVERY TIME
1	Lump Sum	Scope of Work: ▪ Install two (2) Bird Buffer generators, conduit, box and cable per attached drawings. ▪ Bird Buffer and mounting brackets to be supplied by MoDOT. ▪ All conduit, cable and boxes to be supplied by contractor. ▪ Contractor shall modify existing lighting control station to support the new non-photoelectric controlled circuit needed for these units.			To Be Completed No Later than 11-01-2009
Contact Dave MacDonald @ 816-590-3113 on questions regarding the Scope of Work.					
		TOTAL ORDER EXTENSION			

Company Name:	

All responses to this Request for an Informal Quotation MUST be submitted on this form and all pages MUST be returned to the Buyer listed above at the District fax number 816-622-0070.

******If your bid is in excess of $25,000, it must be returned as a sealed bid to the following address: MoDOT, 600 NE Colbern Road, Lee's Summit, MO 64086.***

Please indicate Procurement and the bid number on the outside of the envelope.***

VENDOR NOTES

VENDOR INFORMATION

Vendor Name /Mailing Address		Vendor Contact Information (including area codes):	
		Phone #:	
		Fax #	
		Cellular #	
Printed Name and Title of Responsible Officer or Employee:		Signature:	

Is your company registered/certified with the State of Missouri as a (please circle):				
Is your firm MBE Certified?	Yes	☐	No	☐
Is your firm WBE Certified?	Yes	☐	No	☐
Would your company like information on becoming a registered/certified MBE/WBE vendor?	Yes	☐	No	☐

List all agencies your firm is currently certified with?	

PREFERENCE IN PURCHASING PRODUCTS

DATE: _____

The bidders attention is directed to Section 34.076 RsMO 1986 which gives preference to Missouri corporations, firms, and individuals when letting contracts or purchasing products.

Bids/Quotations received will be evaluated on the basis of this legislation.

All vendors submitting a bid/quotation must furnish <u>ALL</u> information requested below.

FOR CORPORATIONS:

State in which incorporated: _____

FOR OTHERS:

State of domicile: _____

FOR ALL VENDORS:

List address of Missouri offices or places of business:

_____

_____

_____

_____

_____

_____

_____

THIS SECTION MUST BE COMPLETED AND SIGNED:

FIRM NAME: _____

ADDRESS: _____

CITY: _____ **STATE:** _____ **ZIP:** _____

BY (signature required): _____

Federal Tax I.D. #: _____ **if no Federal Tax I.D. # - list Social Security #:** _____

NOTE: For bid/quotation to be considered, the "Preference in Purchasing Products" form must be on file in the General Services (Procurement) Division and must be dated in the current calendar year.

MISSOURI SERVICE-DISABLED VETERAN BUSINESS PREFERENCE

By virtue of statutory authority, RSMo 34.074, a preference will be given all contracts for the performance of any job or service to service-disabled veteran business either doing business as Missouri firms, corporations, or individuals; or which maintain Missouri offices or places of business, when the quality of performance promised is equal or better and the price quoted is the same or less or whenever competing bids, in their entirety, are comparable.

Definitions:

Service-Disabled Veteran is defined as any individual who is disabled as certified by the appropriate federal agency responsible for the administration of veterans' affairs.

Service-Disabled Veteran Business is defined as a business concern:

a. Not less than fifty-one (51) percent of which is owned by one or more service-disabled veterans or, in the case of any publicly owned business, not less than fifty-one (51) percent of the stock of which is owned by one or more service-disabled veterans; and
b. The management and daily business operations of which are controlled by one or more service-disabled veterans.

If an offeror meets the definitions of a service-disabled veteran and a service-disabled veteran business as defined in 34.074 RSMo and is either doing business as a Missouri firm, corporation, or individual; or maintains a Missouri office or place of business, the offeror **must** provide the following with the proposal in order to receive the Missouri service-disabled veteran business preference over a non-Missouri service-disabled veteran business when the quality of performance promised is equal or better and the price quoted is the same or less or whenever competing proposals, in their entirety, are comparable:

a. A copy of a letter from the Department of Veterans Affairs (VA), or a copy of the offeror's discharge paper (DD Form 214, Certificate of Release or Discharge from Active Duty) from the branch of service the offeror was in, stating that the offeror has a service-connected disability rating ranging from 0 to 100% disability; and
b. A completed copy of this exhibit

(NOTE: For ease of evaluation, please attach copy of the above-referenced letter from the VA or a copy of the offeror's discharge paper to this Exhibit.)

By signing below, I certify that I meet the definitions of a service-disabled veteran and a service-disabled veteran business as defined in 34.074 RSMo and that I am either doing business as a Missouri firm, corporation, or individual; or maintain Missouri offices or places of business at the location(s) listed below.

Veteran Information	Business Information
Service-Disabled Veteran's Name, (Please Print)	Service-Disabled Veteran Business Name
Service-Disabled Veteran's Signature	Missouri Address of Service-Disabled Veteran Business

SIGNATURE AND IDENTITY OF BIDDER

The undersigned states that the correct LEGAL NAME and ADDRESS of (1) the individual Bidder, (2) each partner or joint venture (whether individuals or corporations, and whether doing business under a fictitious name), or (3) the corporation (with the state in which it is incorporated) are shown below; that (if not signing with the intention of binding himself to become the responsible and sole contractor) he is the agent of, and duly authorized in writing to sign for the Bidder or Bidders; and that he is signing and executing this (as indicated in the proper spaces below) as the proposal of a

( ) sole individual ( ) partnership ( ) joint venture

( ) corporation, incorporated under laws of state of _____

Dated _____.

Name of individual, all partners, or joint ventures:	Address of each:
_____	_____
_____	_____
_____	_____
_____	_____
_____	_____
_____	_____

doing business under the name of:

	Address of principal place of business in Missouri
_____	_____

(If using a fictitious name, show this name above in addition to legal names)

_____ _____

(If a corporation, show its name above)

ATTEST: (SEAL)

_____ _____

Secretary Title

(NOTE: If the Bidder is doing business under a FICTITIOUS NAME, the Proposal shall be executed in the legal name of the individual, partners, joint ventures, or corporation, with the legal address shown, and REGISTRATION OF FICTITIOUS NAME filed with the Secretary of
State, as required by Sections 417.200 to 417.230, RS Mo. If the Bidder is a CORPORATION NOT ORGANIZED UNDER THE LAWS OF MISSOURI, it shall procure a CERTIFICATE OF AUTHORITY TO DO BUSINESS IN MISSOURI, as required by Section 351.570 and following, RS Mo. A CERTIFIED COPY of such Registration of Fictitious Name or Certificate of Authority to do Business in Missouri shall be filed with the Missouri Highways and Transportation Commission, as required by the Standard specifications, Sec 102.6.6 and 102.6.7.

MISSOURI HIGHWAYS AND TRANSPORTATION COMMISSION
PLANS FOR PROPOSED
STATE HIGHWAY

JACKSON COUNTY

DESIGN DESIGNATION

A.A.D.T. - 2009= 133,894
A.A.D.T. - 2029 = 180,751
D.H.V. = XX%
T = 10.90%
V = 70 M.P.H.
D = 50%

FUNCTIONAL CLASSIFICATION-INTERSTATE

NO RIGHT OF WAY
WILL BE ACQUIRED
FOR THIS PROJECT

CONVENTIONAL SYMBOLS
(USED IN PLANS)

	EXISTING	NEW
BUILDINGS AND STRUCTURES		
GUARD RAIL		
CONCRETE RIGHT-OF-WAY MARKER		
STEEL RIGHT-OF-WAY MARKER		
LOCATION SURVEY MARKER		
UTILITIES		
FIBER OPTICS	—FO—	—FO—
OVERHEAD TELEPHONE	—O—	—●—
UNDERGROUND TELEPHONE	—T—	—T—
OVERHEAD POWER	—□—	—■—
UNDERGROUND POWER	—P—	—P—
GAS	—G—	—G—
WATER	—W—	—W—
MANHOLE	SAN	
FIRE HYDRANT	HYD	
WATER VALVE	WV	
WATER METER	WM	
DROP INLET	DI	
DITCH BLOCK		
GROUND MOUNTED SIGN	SIGN	
LIGHT POLE		
H-FRAME POWER POLE		
TELEPHONE PEDESTAL	PED	
FENCE		
CHAIN LINK	—V—	
WOVEN WIRE	—X—	
GATE POST		
BENCHMARK	BM	

NOTE: DASHED OR OPEN SYMBOLS INDICATE EXISTING FEATURES

PROJECT LIMITS

PUT 2 BIRD BUFFERS ON BENT 22 AND BENT 28

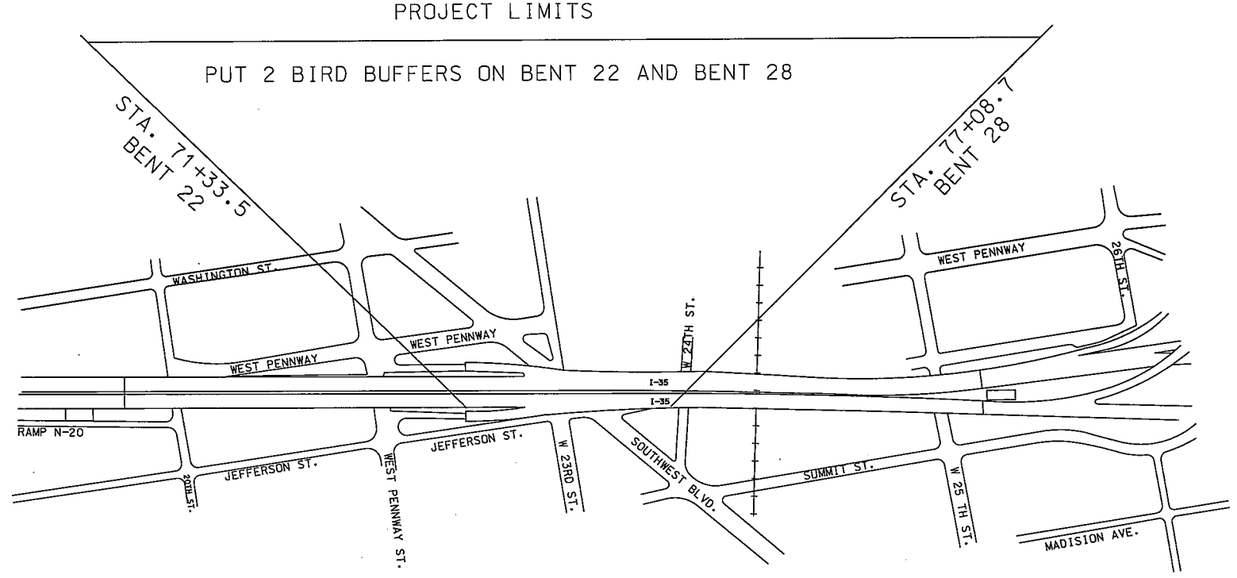

NOT TO SCALE

INDEX OF SHEETS

DESCRIPTION	SHEET NUMBER
TITLE SHEET	1
TYPICAL SECTIONS (TS) (XX SHEETS)	2
QUANTITIES (QU) (XX SHEETS)	3
PLAN-PROFILE (PP)	4-6
RIGHT OF WAY (RW)	XX-XX
REFERENCE POINTS (RP)	XX-XX
COORDINATE POINTS (CP)	XX-XX
SPECIAL SHEETS (SS)	XX-XX
TRAFFIC CONTROL SHEETS (TC)	XX-XX
EROSION CONTROL SHEETS (EC)	XX-XX
LIGHTING (LT)	XX-XX
SIGNALS (SG)	XX-XX
SIGNING (SN)	XX-XX
PAVEMENT MARKING (PM)	XX-XX
CULVERT SECTIONS (CS)	XX-XX
BRIDGE DRAWINGS (B)	
A####	XX-XX
A####	XX-XX
A####	XX-XX
A####	XX-XX
CROSS SECTIONS (XS)	XX-XX

LENGTH OF PROJECT

BEGINNING OF PROJECT	STA. 71+33.5
END OF PROJECT	STA. 77+08.1
APPARENT LENGTH	575 FEET
EQUATIONS AND EXCEPTIONS:	
TOTAL CORRECTIONS	0 FEET
NET LENGTH OF PROJECT	575 FEET
STATE LENGTH	0.109 MILES

"THIS MEDIA SHOULD NOT BE CONSIDERED A CERTIFIED DOCUMENT."

DATE PREPARED	10/07/2009
ROUTE	I-35
STATE	MO
DISTRICT	4
SHEET NO.	1
COUNTY	JACKSON
JOB NO.	J4I2012B
CONTRACT ID.	
PROJECT NO.	
BRIDGE NO.	

DATE	DESCRIPTION

MISSOURI HIGHWAYS AND TRANSPORTATION COMMISSION
105 WEST CAPITOL
JEFFERSON CITY, MO 65102
1-888-ASK-MODOT (1-888-275-6636)

IF A SEAL IS PRESENT ON THIS SHEET IT HAS BEEN ELECTRONICALLY SEALED AND DATED.

2" CABLE AND CONDUIT									
FROM	TO	DISTANCE	ADD 8' AT CONTROLLER	ADD 6' AT JUNCTION BOX	ADD4' FOR SPILTING UP	ADD 5' AT BIRD BUFFER	TOTAL 2c#10 AWG WITH #8 GROUND (L.F.)	SUBTRACT 70' FOR EXISTING	2" RIGID CONDUIT (BRIDGE) (L.F.)
CONTROLLER	BENT 22	212	8	6	4	5	235	-70	165
CONTROLLER	BENT 28	529	8	6	4	5	552	-70	482
						TOTAL	787		647
						PAY TOTAL	787		647

WALL MOUNT PVC 12"X12" JUNCTION BOX			
JUNCTION BOX NUMBER	STATION	LOCATION	(EACH)
1	72+71.00	TOP OF THE BENT 24	1
		TOTAL	1
		PAY TOTAL	1

NOTE:

1. TWO BIRD BUFFERS WILL BE PROVIDED BY COMMISION
2. NO DIRECT PAY FOR INSTALLATION HARDWARES
3. NO DIRECT PAY FOR EXPANSION FITTINGS

"THIS MEDIA SHOULD NOT BE CONSIDERED A CERTIFIED DOCUMENT."

DATE PREPARED 10/07/2009

ROUTE I-35 | STATE MO

DISTRICT 4 | SHEET NO. 3

COUNTY JACKSON

JOB NO. J4I2012B

CONTRACT ID.

PROJECT NO.

BRIDGE NO.

DESCRIPTION	DATE

MISSOURI HIGHWAYS AND TRANSPORTATION COMMISSION

105 WEST CAPITOL
JEFFERSON CITY, MO 65102
1-888-ASK-MODOT (1-888-275-6636)

IF A SEAL IS PRESENT ON THIS SHEET IT HAS BEEN ELECTRONICALLY SEALED AND DATED.

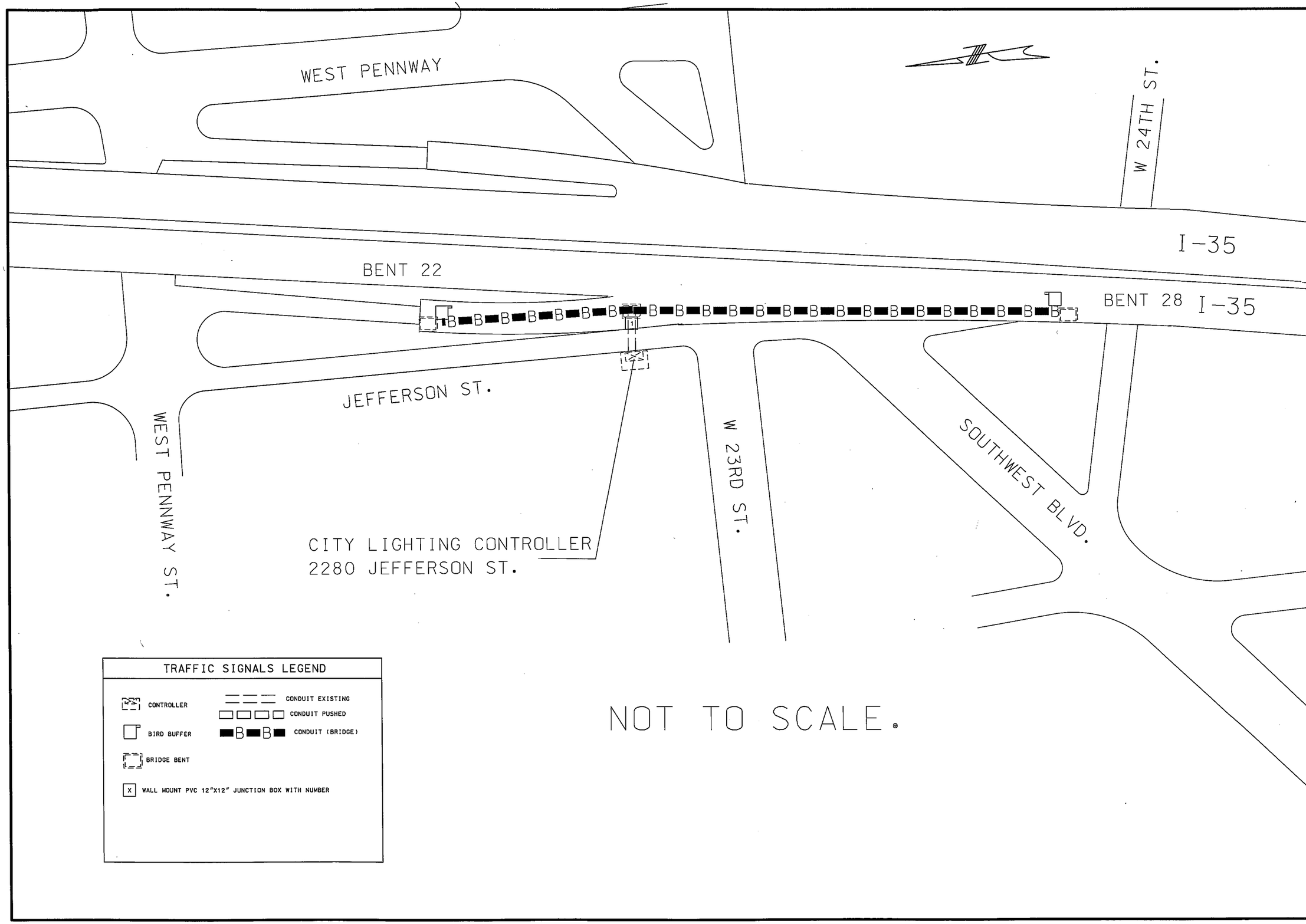

"THIS MEDIA SHOULD NOT BE CONSIDERED A CERTIFIED DOCUMENT."

DATE PREPARED	10/07/2009
ROUTE	I-35
STATE	MO
DISTRICT	MO
SHEET NO.	4
COUNTY	JACKSON
JOB NO.	J4I2012B
CONTRACT ID.	
PROJECT NO.	
BRIDGE NO.	

DATE	DESCRIPTION

IF A SEAL IS PRESENT ON THIS SHEET IT HAS BEEN ELECTRONICALLY SEALED AND DATED.

MISSOURI HIGHWAYS AND TRANSPORTATION COMMISSION

105 WEST CAPITOL
JEFFERSON CITY, MO 65102
1-888-ASK-MODOT (1-888-275-6636)

EFFECTIVE 04-01-99

WIRING DIAGRAM

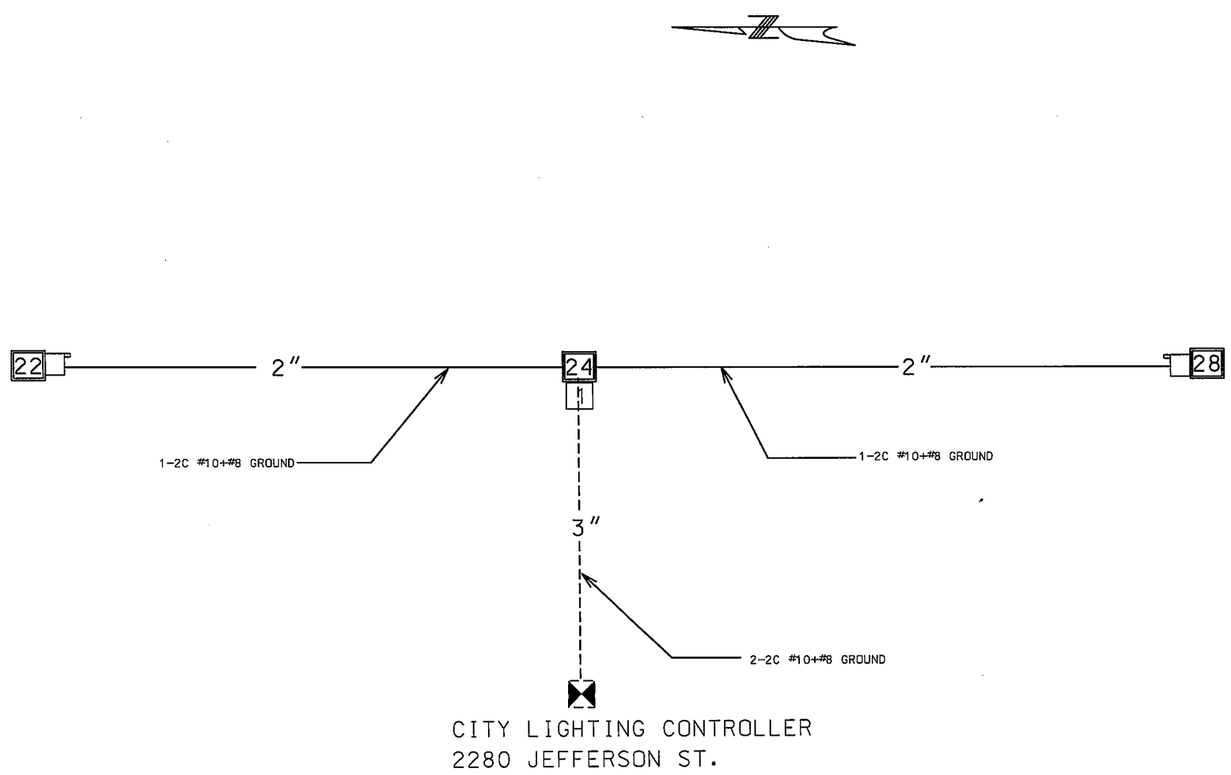

NOTE:

NO DIRECT PAY FOR THE GROUND WIRE

LEGEND

- 3" CONDUIT CONTAINING CABLE WITH SIZE
- BRIDGE CABLE
- EXISTING CABLE
- EXISTING PULL BOX WITH NUMBER
- EXISTING LIGHTING CONTROLLER
- BRIDGE BENT NUMBER
- BIRD BUFFER
- WALL MOUNT PVC 12"X12" JUNCTION BOX WITH NUMBER

"THIS MEDIA SHOULD NOT BE CONSIDERED A CERTIFIED DOCUMENT."

DATE PREPARED	10/07/2009
ROUTE	I-35
STATE	MO
DISTRICT	4
SHEET NO.	5
COUNTY	JACKSON
JOB NO.	J4I2012B
CONTRACT ID.	
PROJECT NO.	
BRIDGE NO.	

DATE	DESCRIPTION

MISSOURI HIGHWAYS AND TRANSPORTATION COMMISSION

105 WEST CAPITOL
JEFFERSON CITY, MO 65102
1-888-ASK-MODOT (1-888-275-6636)

IF A SEAL IS PRESENT ON THIS SHEET IT HAS BEEN ELECTRONICALLY SEALED AND DATED.

INTERSECTION

D-37D

BIRDBUFFERd37.dgn 10/07/2009

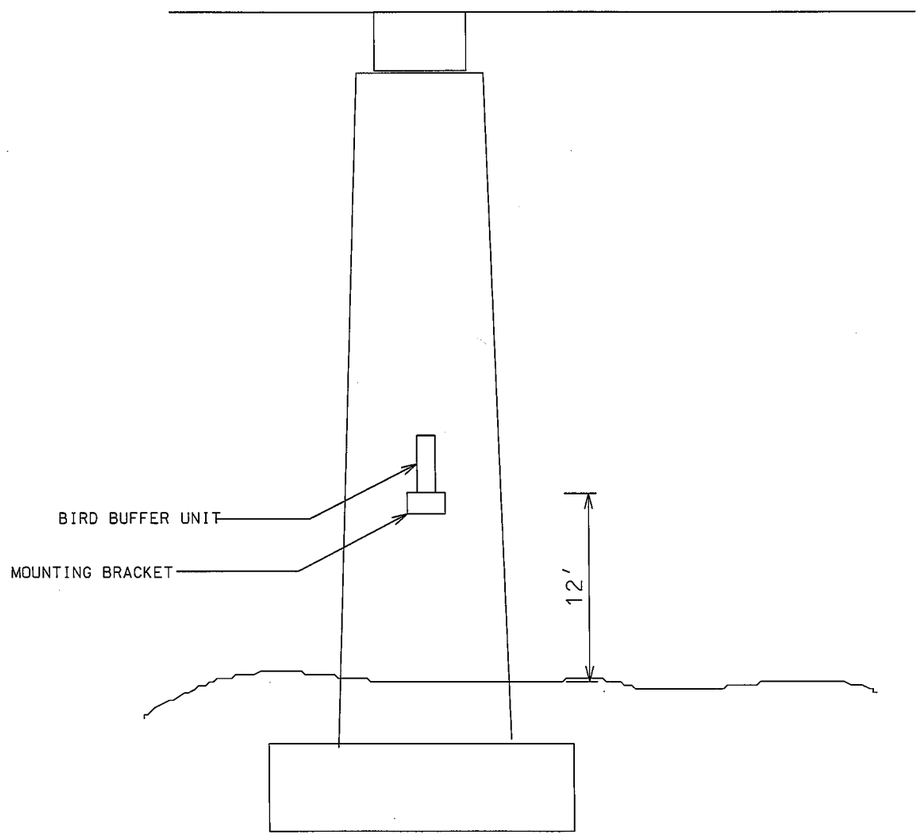

SPECIAL SHEET FOR INSTALLATION

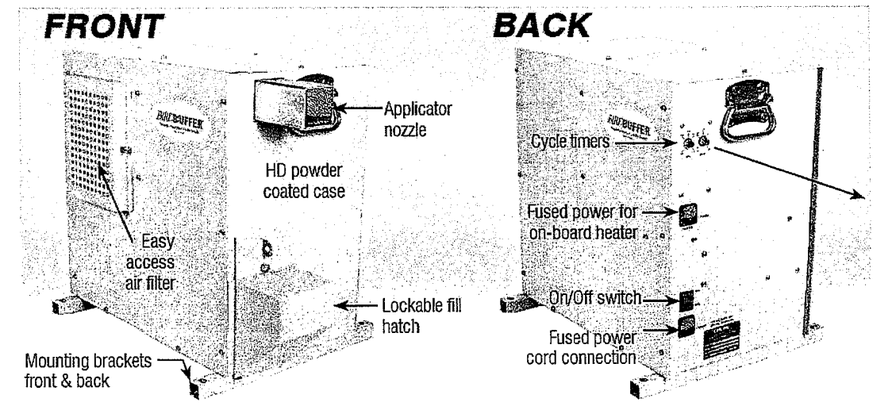

FOR INFORMATION ONLY

NOTE:

1. TWO BIRD BUFFERS WILL BE PROVIDED BY COMMISION
2. NO DIRECT PAY FOR INSTALLATION HARDWARES

"THIS MEDIA SHOULD NOT BE CONSIDERED A CERTIFIED DOCUMENT."

DATE PREPARED	
10/06/2009	
ROUTE	STATE
I-35	MO
DISTRICT	SHEET NO.
4	6
COUNTY	
JACKSON	
JOB NO.	
J4I2012B	
CONTRACT ID.	
PROJECT NO.	
BRIDGE NO.	

DATE	DESCRIPTION

MISSOURI HIGHWAYS AND TRANSPORTATION COMMISSION

105 WEST CAPITOL
JEFFERSON CITY, MO 65102
1-888-ASK-MODOT (1-888-275-6636)

IF A SEAL IS PRESENT ON THIS SHEET IT HAS BEEN ELECTRONICALLY SEALED AND DATED.

FOR INFORMATION ONLY

MISSOURI STATE HIGHWAY DEPARTMENT

DIST	COUNTY	ROUTE	SHEET NO.	TOTAL SHEETS
4	JACKSON	I-35	35	

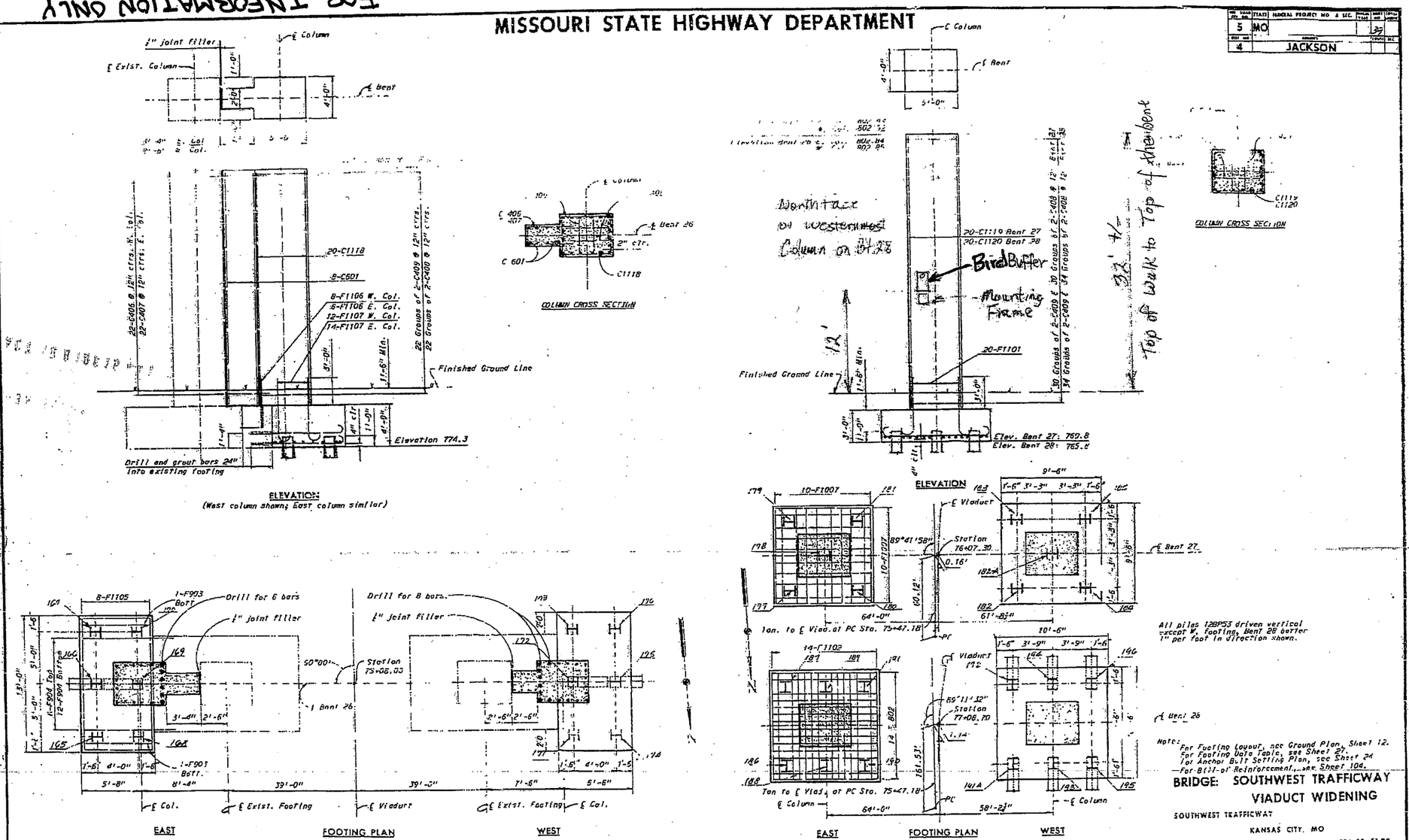

FOR INFORMATION ONLY

MISSOURI STATE HIGHWAY DEPARTMENT

TYPE	FROM	TO	STATE	FEDERAL PROJECT NO. S-REC	SHEET NO.	TOTAL SHEETS
			5	MO	82	
DIST. NO.			COUNTY		SHEET NO.	
			4	JACKSON		

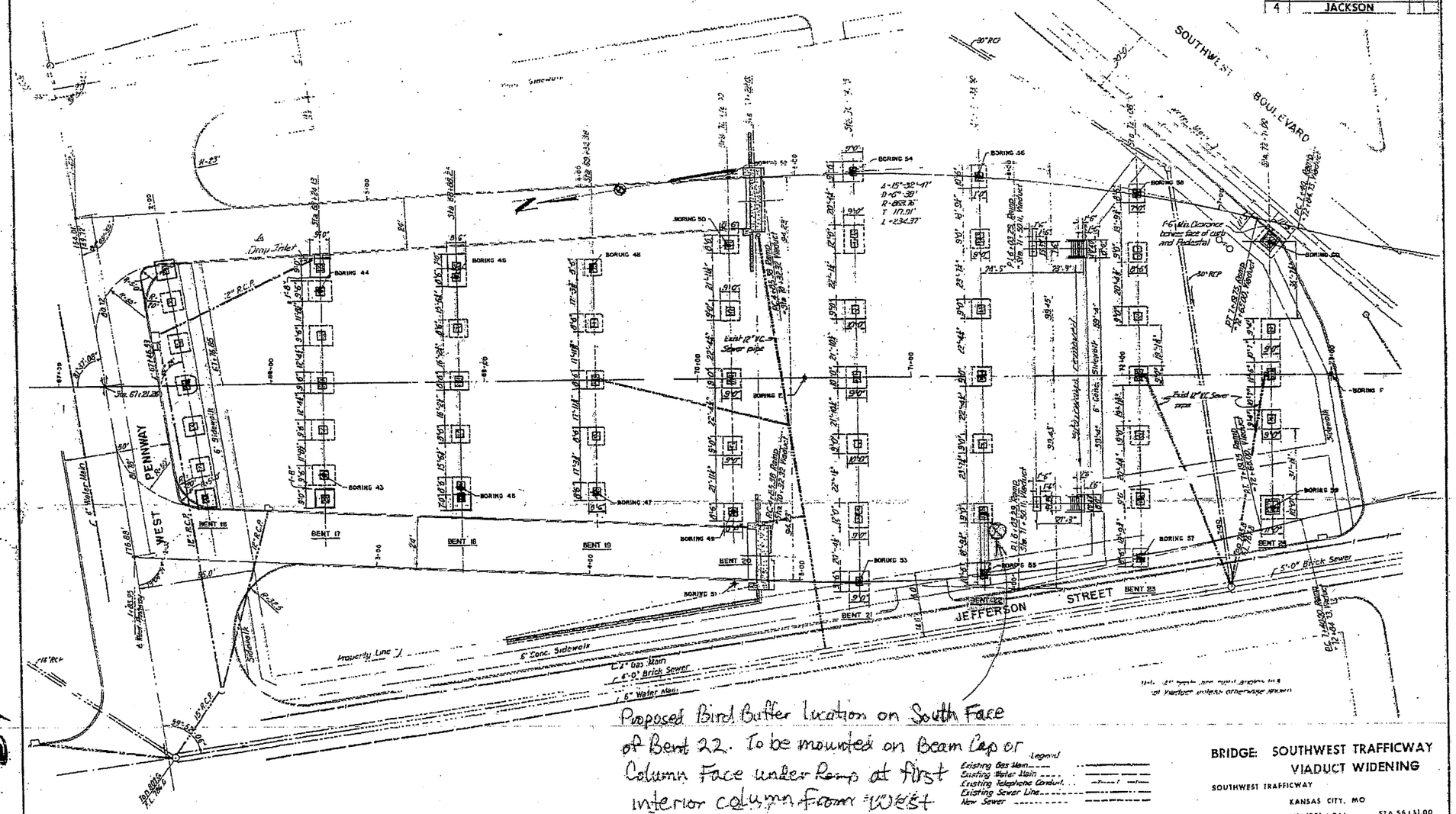

Proposed Bird Buffer location on South Face of Bent 22. To be mounted on Beam Cap or Column Face under Ramp at first interior column from West side

HOWARD, NEEDLES, TAMMEN & BERGENDOFF
CONSULTING ENGINEERS
KANSAS CITY NEW YORK

MADE JFD DATE 9-8-65 CHECKED AMH DATE 6-6-66

NOTE: This drawing is not to scale. Follow dimensions.

GROUND PLAN
BENT 16 TO BENT 24

BRIDGE: SOUTHWEST TRAFFICWAY VIADUCT WIDENING

SOUTHWEST TRAFFICWAY
KANSAS CITY, MO

PROJECT NO. I-35-1(41) (CTE I-35)

STA. 56+51.00 ℄ S.W. TRFWY

JACKSON COUNTY

SHEET 11 OF 109

L-232R

51

FOR INFORMATION ONLY

MISSOURI STATE HIGHWAY DEPARTMENT

5 MO
4
COUNTY JACKSON

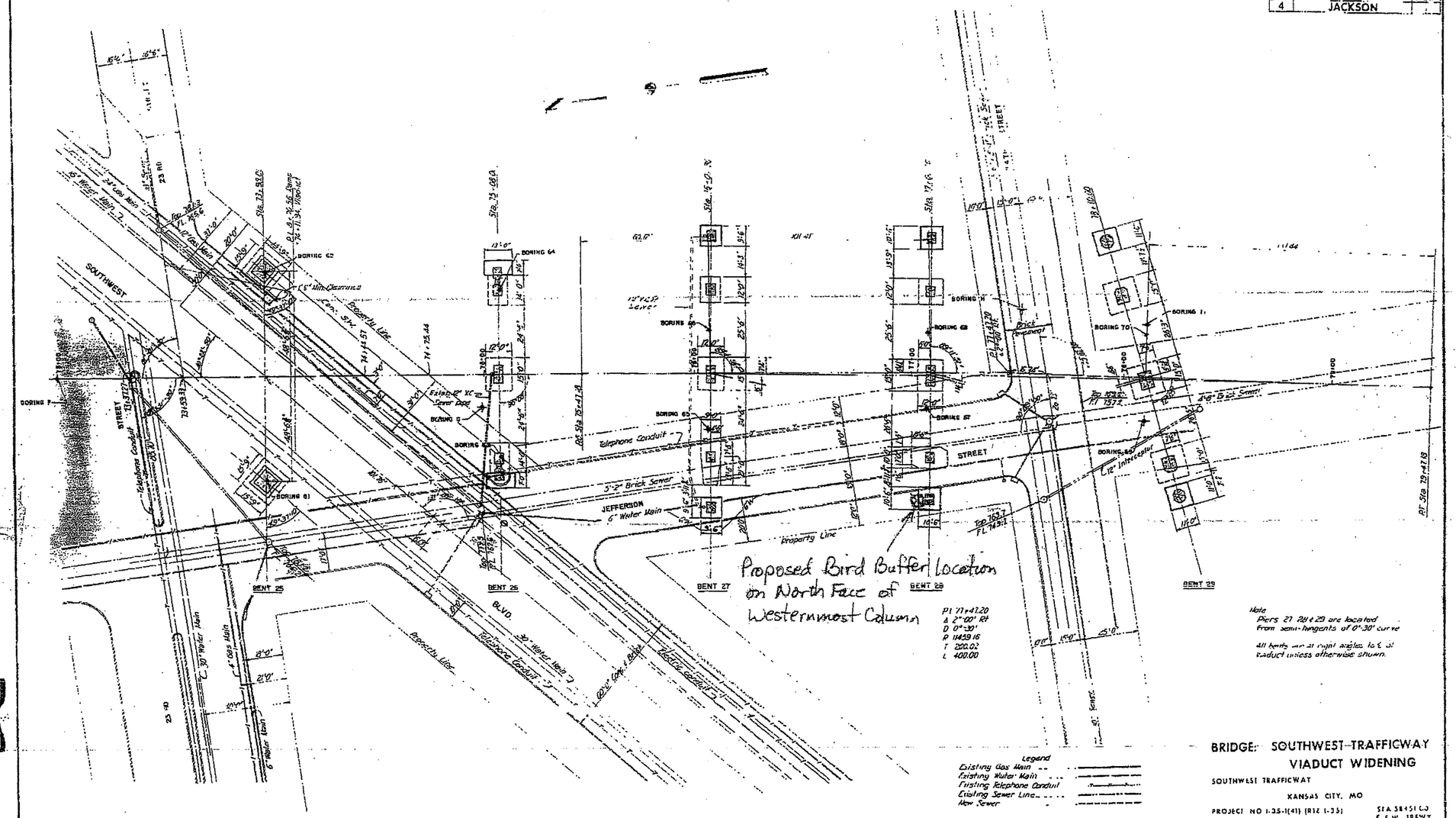

FOR INFORMATION ONLY

52

FED. ROAD SECT. NO.	STATE	FED. AID PROJ. NO.	FISCAL YEAR	SHEET NO.	TOTAL SHEETS	SECTION
5	Mo		1969	29		

FINAL PLANS

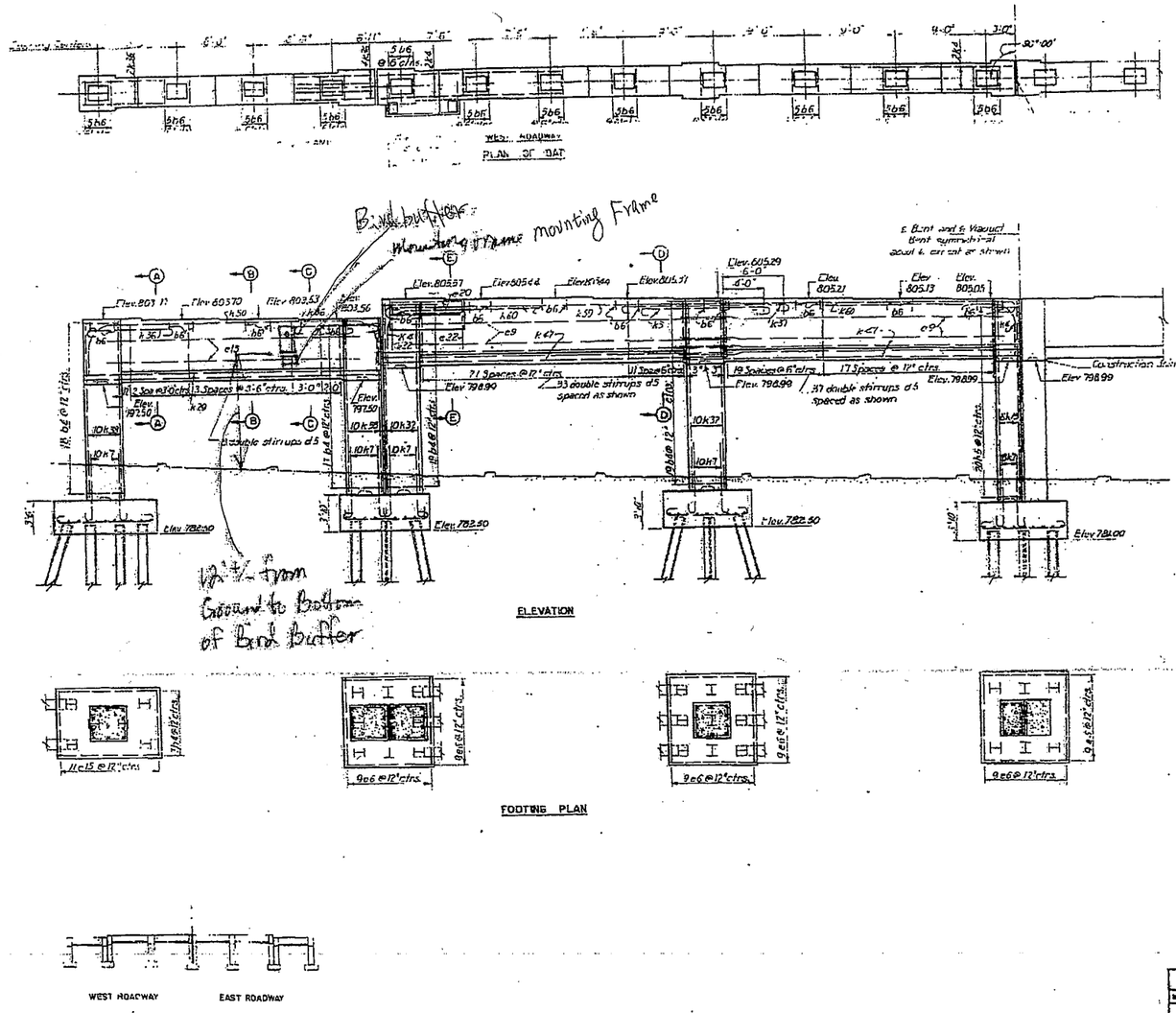

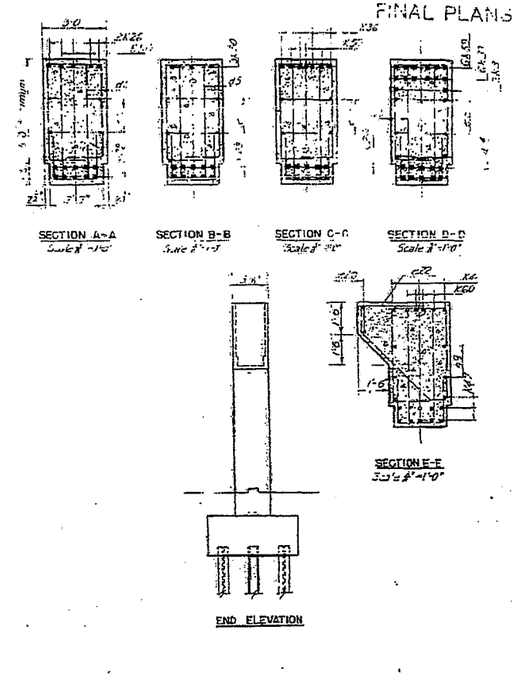

Piles to be 12 x 12 BP53
For bent bell setting, see sheet 55
For Reinforcement Schedule, see sheet 53
For dimensions not shown, see sheet 30
For details of form see sheet 67

BAR SIZE			
MARK	SIZE	MARK	SIZE
a	3/4"ø	f	3/4"ø
b	1/2"ø	g	1"ø
c	1/2"ø	h	1/2"ø
d	5/8"ø	j	1/2"ø
e	3/4"ø	k	1/2"ø

MISSOURI STATE HIGHWAY DEPARTMENT

SOUTH-WEST TRAFFICWAY VIADUCT

FROM 20th STREET TO 25th STREET

KANSAS CITY, MISSOURI

PROJECT UI 2886 (2) c ROUTE US 69

JACKSON COUNTY

BENT 22

SCALE 1/8" = 1'-0" HOWARD, NEEDLES, TAMMEN & BERGENDOFF CONSULTING ENGINEERS

DRAWN E.V.G. DATE 4-14-61 KANSAS CITY NEW YORK

TRACED E.V.G. DATE 4-23-61

CHECKED D.F. DATE 6-21-68

728 SHEET 29A

L-232

319

FOR INFORMATION ONLY

FINAL PLANS

MISSOURI STATE HIGHWAY DEPARTMENT

5	MO	I-35-1(41)		27
4		JACKSON		I-35

FINAL PLANS

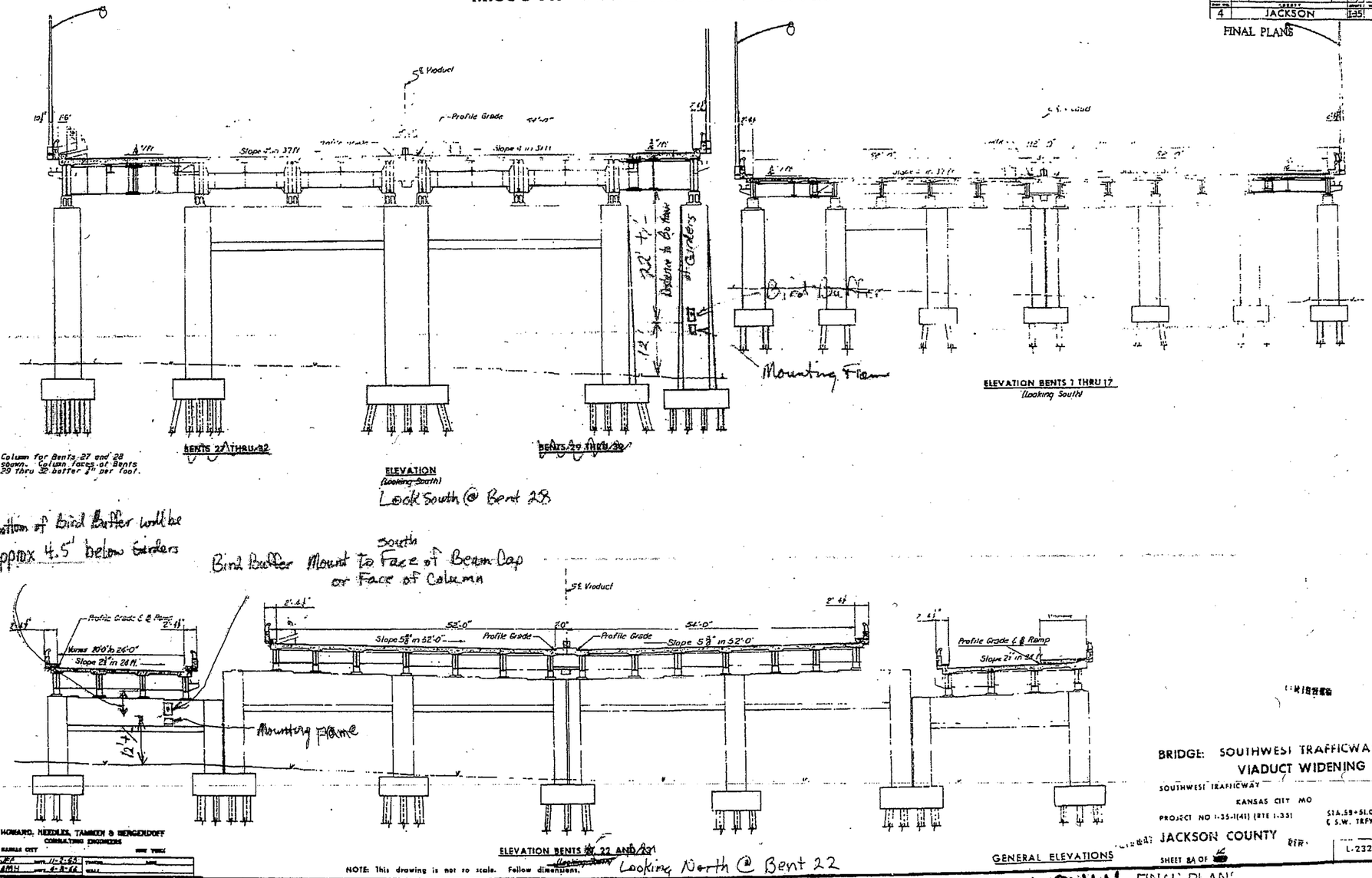

154

FOR INFORMATION ONLY FINAL PLANS

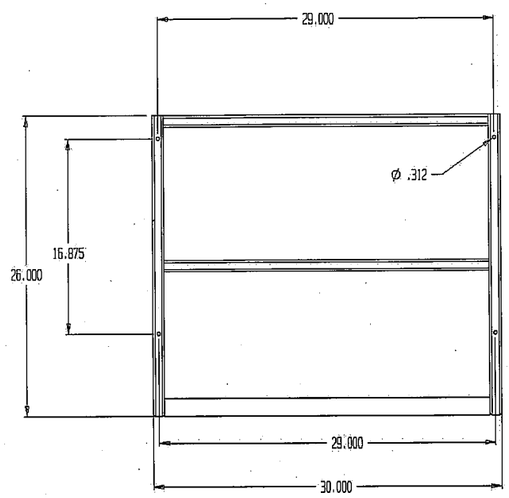

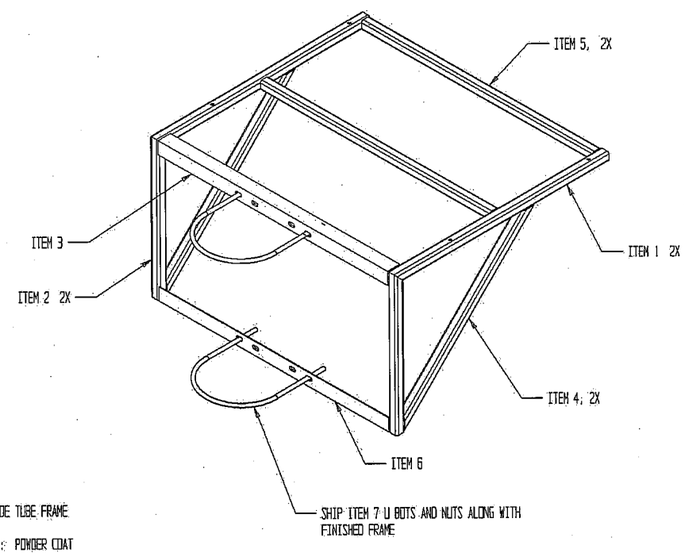

CITC

30" WIDE TUBE FRAME

FINISH: POWDER COAT

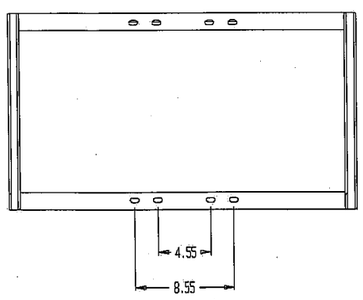

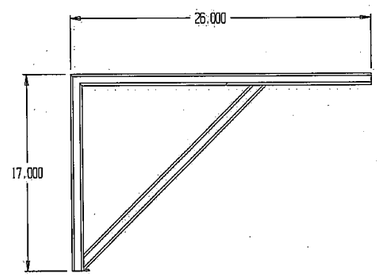

FOR INFORMATION ONLY

WORKER ELIGIBILITY VERIFICATION AFFIDAVIT FOR ALL MHTC/MODOT CONTRACT AGREEMENTS IN EXCESS OF $5,000

(for joint ventures, a separate affidavit is required for each business entity)

STATE OF _____)
) ss
COUNTY OF _____)

On this _____ day of _____, 20_____, before me appeared _____, personally known to me or proved to me on the basis of satisfactory evidence to be a person whose name is subscribed to this affidavit, who being by me duly sworn, deposed as follows:

My name is _____, and I am of sound mind, capable of making this affidavit, and personally certify the facts herein stated, as required by Section 285.530, RSMo, to enter into any contract agreement with the state to perform any job, task, employment, labor, personal services, or any other activity for which compensation is provided, expected, or due, including but not limited to all activities conducted by business entities:

I am the _____ of _____, and I am duly authorized, directed, and/or
title business name
empowered to act officially and properly on behalf of this business entity.

I hereby affirm and warrant that the aforementioned business entity is enrolled in a federal work authorization program operated by the United States Department of Homeland Security to verify information of newly hired employees, and the aforementioned business entity shall participate in said program with respect to all employees working in connection to work under the within state contract agreement with the Missouri Highways and Transportation Commission (MHTC). I have attached documentation to this affidavit to evidence enrollment/participation by the aforementioned business entity in a federal work authorization program, as required by Section 285.530, RSMo.

In addition, I hereby affirm and warrant that the aforementioned business entity does not and shall not knowingly employ, in connection to work under the within state contract agreement with MHTC, any alien who does not have the legal right or authorization under federal law to work in the United States, as defined in 8 U.S.C. § 1324a(h)(3).

I am aware and recognize that, unless certain contract and affidavit conditions are satisfied pursuant to Section 285.530, RSMo, the aforementioned business entity may be held liable under Sections 285.525 though 285.550, RSMo, for subcontractors that knowingly employ or continue to employ any unauthorized alien to work within the state of Missouri.

I acknowledge that I am signing this affidavit as a free act and deed of the aforementioned business entity and not under duress.

_____
Affiant Signature

Subscribed and sworn to before me this _____ day of _____, 20_____.

_____
Notary Public

My commission expires:

[documentation of enrollment/participation in a federal work authorization program attached]

APPLICANT AFFIDAVIT FOR SOLE-PROPRIETORSHIP OR PARTNERSHIP
(a separate affidavit is required for each owner and general partner)

STATE OF _____)
) ss
COUNTY OF _____)

On this _____ day of _____, 20_____, before me appeared _____, personally known to me or proved to me on the basis of satisfactory evidence to be the person whose name is subscribed to the within instruments, who being by me duly sworn, deposed as follows:

My name is _____, and I am of sound mind, capable of making this affidavit, and personally certify the facts herein stated, as required by Section 208.009, RSMo, for failure to provide affirmative proof of lawful presence in the United States of America:

I am the _____ of _____, which is applying for a public benefit
owner or partner business name
(grant, contract, and/or loan) administered/provided by the Missouri Highways and Transportation Commission (MHTC), acting by and through the Missouri Department of Transportation (MoDOT).

I am classified by the United States of America as: (check the applicable box)

❑ a United States citizen. ❑ an alien lawfully admitted for permanent residence.

I am aware that Missouri law provides that any person who obtains any public benefit by means of a willfully false statement or representation, or by willful concealment or failure to report any fact or event required to be reported, or by other fraudulent device, shall be guilty of the crime of stealing pursuant to Section 570.030, RSMo, which is a Class C felony for stolen public benefits valued between $500 and $25,000 (punishable by a term of imprisonment not to exceed 7 years and/or a fine not more than $5,000 – Sections 558.011 and 560.011, RSMo), and is a Class B felony for stolen public benefits valued at $25,000 or more (punishable by a term of imprisonment not less than 5 years and not to exceed 15 years – Section 558.011, RSMo).

I recognize that, upon proper submission of this sworn affidavit, I will only be eligible for temporary public benefits until such time as my lawful presence in the United States is determined, or as otherwise provided by Section 208.009, RSMo.

I understand that Missouri law requires MHTC/MoDOT to provide assistance in obtaining appropriate documentation to prove citizenship or lawful presence in the United States, and I agree to submit any requests for such assistance to MHTC/MoDOT in writing.

I acknowledge that I am signing this affidavit as a free act and deed and not under duress.

_____ _____
Affiant Signature Affiant's Social Security Number or Applicable Federal Identification Number

Subscribed and sworn to before me this _____ day of _____, 20_____.

_____
Notary Public

My commission expires:

STANDARD SOLICITATION PROVISIONS

a. The Missouri Department of Transportation (MoDOT) reserves the right to reject any or all bids/quotes/proposals, and to accept or reject any items thereon, and to waive technicalities. In case of error in the extension of prices in the bid/quote/proposal, unit prices will govern.

b. All bids/quotes/proposals must be signed with the firm name and by a responsible officer or employee. Obligations assumed by such signature must be fulfilled.

c. By virtue of statutory authority, a preference will be given to materials, products, supplies, provisions and all other articles produced, manufactured, made or grown, within the State of Missouri.

d. Time of delivery is a part of the consideration and, if not otherwise stated in the solicitation documents, must be stated in definite terms by the Bidder/Offeror and must be adhered to. If time varies on different items, the Bidder/Offeror shall so state.

e. If providing bids/quotes/proposals for commodities, the Bidder/Offeror will state brand or make on each item. If bidding or proposing other than the make, model or brand specified, the manufacturer's name, model number or catalog number must be given.

f. **For bids/proposals of $25,000** or more, no bids/proposals by telephone, telegram or telefax will be accepted.

g. The date specified for the returning of bids/quotes/proposals is a firm deadline and all bids/quotes/proposals must be received at the designated office by that time. The Department does not recognize the U.S. Mail, Railway Express Agency, Air Express, or any other organization, as its agent for purposes of accepting proposals. All proposals arriving at the designated office after the deadline specified will be rejected.

GENERAL TERMS AND CONDITIONS

General Performance

a. This work is to be performed under the general supervision and direction of the Missouri Department of Transportation (MoDOT) and, if awarded any portion of the work, the Contractor agrees to furnish at his own expense all labor and equipment required to complete the work, it being expressly understood that this solicitation is for completed work based upon the price(s) specified and is not a solicitation for rental of equipment or employment of labor by MoDOT, and MoDOT is to have no direction or control over the employees used by the Contractor in performance of the work.

Deliveries

a. Unless otherwise specified on the solicitation documents or purchase order, suppliers shall give at least 24 hours advance notice of each delivery. Delivery will only be received between the hours of 8:00 a.m. to 3:00 p.m., Monday through Friday. Material arriving after 3:00 p.m. will not be unloaded until the following workday. No material will be received on Saturday, Sunday or state holidays.

b. If the prices bid herein include the delivery cost of the material, the Contractor agrees to pay all transportation charges on the material as FOB - Destination. Freight costs must be included in the unit price bid and not listed as a separate line item.

c. Any demurrage is to be paid by the Contractor direct to the railroad or carrier.

Nondiscrimination

a. The Contractor shall comply with the Regulations relative to nondiscrimination in federally-assisted programs of the Department of Transportation, Title 49, Code of Federal Regulations, Part 21, as they may be amended from time to time, (hereinafter referred to as the Regulations), which are herein incorporated by reference and made a part of this contract.

b. All solicitations either by competitive bidding or negotiation made by the Contractor for work to be performed under a subcontract, including procurements of materials or leases of the Contractor's obligations under this contract and the Regulations, will be relative to nondiscrimination on the grounds of race, color, or national origin.

1) Sanctions for Noncompliance: In the event of the Contractor's noncompliance with the nondiscrimination provisions of this contract, MoDOT shall impose such contract sanctions as it or the Federal Highway Administration may determine to be appropriate, including, but not limited to:

i. withholding of payments to the Contractor under the contract until the Contractor complies, and/or,

ii. cancellation, termination or suspension of the contract, in whole or in part.

Contract/Purchase Order

a. By submitting a bid/quote/proposal, the Bidder/Offeror agrees to furnish any and all equipment, supplies and/or services specified in the solicitation documents, at the prices quoted, pursuant to all requirements and specifications contained therein.

b. A binding contract shall consist of: (1) the solicitation documents, amendments thereto, and/or Best and Final Offer (BAFO) request(s) with any changes/additions, (2) the Contractor's proposal and/or submitted pricing, and (3) the MHTC's acceptance of the proposal and/or bid by purchase order or post-award contract.

c. A notice of award does not constitute an authorization for shipment of equipment or supplies or a directive to proceed with services. Before providing equipment, supplies and/or services, the Contractor must receive a properly authorized purchase order and/or notice to proceed.

d. The contract expresses the complete agreement of the parties and performance shall be governed solely by the specifications and requirements contained therein. Any change, whether by modification and/or supplementation, must be accomplished by a formal contract amendment signed and approved by and between the duly authorized representative of the Contractor and the duly authorized representative of the MHTC, by a modified purchase order prior to the effective date of such modification. The Contractor expressly and explicitly understands and agrees that no other method and/or no other document, including correspondence, acts, and oral communications by or from any person, shall be used or construed as an amendment or modification.

Subcontracting

a. It is specifically understood that no portion of the material or any interest in the contract, shall be subcontracted, transferred, assigned or otherwise disposed of, except with the written consent of MoDOT. Request for permission to subcontract or otherwise dispose of any part of the work shall be in writing to MoDOT and accompanied by documentation showing that the organization which will perform the work is particularly experienced and

equipped for such work.

b. Consent to subcontract or otherwise dispose of any portion of the work shall not be construed to relieve the Contractor of any responsibility for the production and delivery of the contracted work and the completion of the work within the specified time.

c. All payments for work performed by a subcontractor shall be made to the Contractor to whom the contract was awarded and the purchase order issued.

Invoicing and Payment

a. MoDOT is exempt from paying Missouri Sales Tax, Missouri Use Tax and Federal Excise Tax. However, the Contractor may themselves be responsible for the payment of taxes on materials they purchase to fulfill the contract. A Project Tax Exemption Certificate will be furnished to the successful Bidder/Offeror upon request if applicable.

b. Each invoice should be itemized in accordance with items listed on the purchase order and/or contract. The statewide financial management system has been designed to capture certain receipt and payment information. Therefore, each invoice submitted must reference the purchase order number and must be itemized in accordance with items listed on the purchase order. Failure to comply with this requirement may delay processing of invoices for payment.

c. Unless otherwise provided for in the solicitation documents, payment for all equipment, supplies, and/or services required herein shall be made in arrears. The Missouri Highways and Transportation Commission (MHTC) shall not make any advance deposits.

d. The MHTC assumes no obligation for equipment, supplies, and/or services shipped or provided in excess of the quantity ordered. Any authorized quantity is subject to the MHTC's rejection and shall be returned at the Contractor's expense.

e. The MHTC reserves the right to purchase goods and services using the state-purchasing card.

Applicable Laws and Regulations

a. The contract shall be construed according to the laws of the State of Missouri. The Contractor shall comply with all local, state, and federal laws and regulations related to the performance of the contract.

b. The Contractor must be registered and maintain good standing with the Secretary of State of the State of Missouri and other regulatory agencies, as may be required by law or regulations. Prior to the issuance of a purchase order and/or notice to proceed, the Contractor may be required to submit to MoDOT a copy of their current Authority Certificate from the Secretary of State of the State of Missouri.

1) Prior to the issuance of a purchase order and/or notice to proceed, all **out-of-state** Contractors **providing services** within the state of Missouri must submit to MoDOT a copy of their current Transient Employer Certificate from the Department of Revenue, in addition to a copy of their current Authority Certificate from the Secretary of State of the State of Missouri.

c. The exclusive venue for any legal proceeding relating to or arising, out of the contract shall be in the Circuit Court of Cole County, Missouri.

Executive Order

a. The Contractor shall comply with all the provisions of Executive Order 07-13, issued by the Honorable Matt Blunt, Governor of Missouri, on the sixth (6th) day of March, 2007. This Executive Order, which promulgates the State of Missouri's position to not tolerate persons who contract with the state engaging in or supporting illegal activities of employing individuals who are not eligible to work in the United States, is incorporated herein by reference and made a part of this Agreement.

1) "By signing this Agreement, the Contractor hereby certifies that any employee of the Contractor assigned to perform services under the contract is eligible and authorized to work in the United States in compliance with federal law."

2) In the event the Contractor fails to comply with the provisions of the Executive Order 07-13, or in the event the Commission has reasonable cause to believe that the contractor has knowingly employed individuals who are not eligible to work in the United States in violation of federal law, the Commission reserves the right to impose such contract sanctions as it may determine to be appropriate, including but not limited to contract cancellation, termination or suspension in whole or in part or both.

3) The Contractor shall include the provisions of this paragraph in every subcontract. The Contractor shall take such action with respect to any subcontract as the Commission may direct as a means of enforcing such provisions, including sanctions for noncompliance.

Preferences

a. In the evaluation of bids/quotes/proposals, preferences shall be applied in accordance with Chapter 34 RSMo. Contractors should apply the same preferences in selecting subcontractors.

b. By virtue of statutory authority, RSMo. 34.076 and 34.350 to 34.359, a preference will be given to materials, products, supplies, provisions and all other articles produced, manufactured, made or grown within the State of Missouri. Such preference shall be given when quality is equal or better and delivered price is the same or less.

1) If attached, the document entitled **"PREFERENCE IN PURCHASING PRODUCTS"** should be completed and returned with the solicitation documents.

2) If attached, the document entitled **"MISSOURI DOMESTIC PRODUCTS PROCUREMENT ACT"** should be completed and returned with the solicitation documents**. Applies if bid is Twenty-Five Thousand Dollars ($25,000.00) or more.**

c. By virtue of statutory authority, RSMo 34.074, a preference will be given all contracts for the performance of any job or service to service-disabled veteran business either doing business as Missouri firms, corporations, or individuals; or which maintain Missouri offices or places of business, when the quality of performance promised is equal or better and the price quoted is the same or less or whenever competing bids, in their entirety, are comparable.

1) If attached, the document entitled **"MISSOURI SERVICE-DISABLED VETERAN PREFERENCE"** should be completed and returned with the solicitation documents.

d. In the event of a tie of low bids, the MHTC reserves the right to establish the method to be used in determining the award

Remedies and Rights

a. No provision in the contract shall be construed, expressly or implied, as a waiver by the MHTC of any existing or future right and/or remedy available by law in the event of any claim by the MHTC of the Contractor's default or breach of contract.

b. The Contractor agrees and understands that the contract shall constitute an assignment by the Contractor to the MHTC of all rights, title and interest in and to all causes of action that the Contractor may have under the antitrust laws of the United States or State of Missouri for which causes of action have accrued or will accrue as the result of or in relation to the particular equipment, supplies, and/or services purchased or produced by the Contractor in the fulfillment of the contract with the MHTC.

c. In the event a Contractor becomes involved in, or is threatened with, litigation with a subcontractor or supplier as a result of such direction, the Contractor may request MoDOT to enter into such litigation to protect the interests of the MHTC, and, in addition, the Contractor may request the United States to enter into such litigation to protect the interests of the United States.

Cancellation of Contract

a. The MHTC may cancel the contract at any time for a material breach of contractual obligations or for convenience by providing the Contractor with written notice of cancellation. Should the MHTC exercise its right to cancel the contract for such reasons, cancellation will become effective upon the date specified in the notice of cancellation sent to the Contractor.

b. If the MHTC cancels the contract for breach, the MHTC reserves the right to obtain the equipment, supplies, and/or services to be provided pursuant to the contract from other sources and upon such terms and in such manner as the MHTC deems appropriate and charge the Contractor for any additional costs incurred thereby.

Bankruptcy or Insolvency

a. Upon filing for any bankruptcy or insolvency proceeding by or against the Contractor, whether voluntary or involuntary, or upon the appointment of a receiver, trustee, or assigned the benefit or creditors, the Contractor must notify MoDOT immediately. Upon learning of any such actions, the MHTC reserves the right, at its sole discretion, to either cancel the contract or affirm the contract and hold the Contractor responsible for damages.

Inventions, Patents, and Copyrights

a. The Contractor shall defend, protect, and hold harmless the MHTC, its officers, agents, and employees against all suits of law or in equity resulting from patent and copyright infringement concerning the Contractor's performance or products produced under the terms of the contract.

Inspection and Acceptance

a. No equipment, supplies, and/or services received by MoDOT pursuant to a contract shall be deemed accepted until MoDOT has had reasonable opportunity to inspect said equipment, supplies, and/or services.

b. All equipment, supplies, and/or services which do not comply with the specifications and/or requirements or which are otherwise unacceptable or defective may be rejected. In addition, all equipment, supplies, and/or services which are discovered to be defective or which do not conform to any warranty of the Contractor upon inspection (or at any later time if the defects contained were not reasonably ascertainable upon the initial inspection) may be rejected.

c. The MHTC reserves the right to return any such rejected shipment at the Contractor's expense for full credit or replacement and to specify a reasonable date by which replacements must be received.

d. The MHTC's right to reject any unacceptable equipment, supplies, and/or services shall not exclude any other legal, equitable or contractual remedies the MHTC may have.

Warranty

a. The Contractor expressly warrants that all equipment, supplies, and/or services provided shall: (1) conform to each and every specification, drawing, sample or other description which was furnished to or adopted by MoDOT, (2) be fit and sufficient for the purpose expressed in the solicitation documents, (3) be merchantable, (4) be of good materials and workmanship, and (5) be free from defect.

b. Such warranty shall survive delivery and shall not be deemed waived either by reason of the MHTC's acceptance of or payment for said equipment, supplies, and/or services.

Status of Independent Contractor

a. The Contractor represents itself to be an independent Contractor offering such services to the general public and shall not represent itself or its employees to be an employee of the MHTC. Therefore, the Contractor shall assume all legal and financial responsibility for taxes, FICA, employee fringe benefits, workers' compensation, employee insurance, minimum wage requirements, overtime, etc., and agrees to indemnify, save and hold the MHTC, its officers, agents and employees harmless from and against any and all losses (including attorney fees) and damage of any kind related to such matters.

Indemnification

a. The Offeror shall defend, indemnify and hold harmless the Commission, including its members and department employees, from any claim or liability whether based on a claim for damages to real or personal property or to a person for any matter relating to or arising out of the Offeror's performance of its obligations under this Agreement.

SPECIAL TERMS AND CONDITIONS

Insurance

The Contractor shall maintain or cause to be maintained at Contractor's own expense commercial general liability, automobile liability, worker's compensation insurance against negligent acts, errors or omissions of the Contractor, or its subcontractors and anyone directly or indirectly employed by any of them. Any insurance policy required as specified in this Section shall be written by a company that is licensed and authorized to issue such insurance in the state of Missouri and shall provide insurance coverage for not less than the following limits of liability:

a. General Liability: Not less than $500,000 for any one person in a single accident or occurrence, and not less than $3,000,000 for all claims arising out of a single occurrence;

b. Automobile Liability: Not less than $500,000 for any one person in a single accident or occurrence, and not less than $3,000,000 for all claims arising out of a single occurrence;

c. Missouri State Workmen's Compensation policy or equivalent in accordance with state law.

Upon request from the Commission, the Contractor shall provide the Commission with certificates of insurance evidencing the required coverage and that such insurance is in effect.

Required Specifications

a. All materials, equipment, and/or services bid upon must comply with the provisions outlined in the solicitation documents.

b. The material to be supplied under the contract will comply with the quality and gradation requirements of the **Missouri Standard Specifications for Highway Construction, Edition of 2004,** and any revisions thereto, unless modified by these specifications.

Information and Reports

a. The Contractor shall provide all information and reports required by the Regulations, or Directives issued pursuant thereto, and shall permit access to its books, records, accounts, other sources of information, and its facilities as may be determined by the Missouri Department of Transportation or the Federal Highway Administration to be pertinent to ascertain compliance with such Regulations or Directives. Where any information required of a Contractor is in the exclusive possession of another who fails or refuses to furnish this information the Contractor shall so certify to the Missouri Department of Transportation, or the Federal Highway Administration as appropriate, and shall set forth what efforts it has made to obtain the information.

Prevailing Wage

a. If the bid/quote/proposal is accepted, the vendor will be required to comply with the prevailing wages as fixed by the Missouri Department of Labor and Industrial Relations, in effect as of the date of the issuance of the solicitation, for each affected craft and type of workmen in the following county(ies): **JACKSON**. The Annual Wage Order #**16** may be inspected at any District Office or at the Central Office in Jefferson City, MO.

b. The Contractor shall submit notarized weekly payroll affidavit documentation included with the project request for payment. The successful vendor must provide a lien waiver from all material suppliers.

Permits, Licenses and Safety Issues

a. The contract price shall include any necessary permits and licenses required by law incidental to the work. Local ordinances requiring building permits are not applicable to state agencies.

b. The Contractor will comply with local laws involving safety in the prosecution of the work.

Award

a. Award of this bid/quote/proposal will be made on an "All Or Nothing" basis using the "lowest and best" principle of award.

Notice to Proceed

a. A purchase order will be issued as a **"Notice to Proceed"** by the Department.

Temporary Suspension of Work

a. The **District Engineer** shall have authority to suspend work wholly or in part for such period or periods as may be deemed necessary when weather or other conditions are such that in the opinion of the engineer, the work may be done at a later time with advantage to the Department or for failure on the part of the Contractor to comply with any of the provisions of the Contract.

b. If the Department suspends the work for its own advantages and not because of the Contractor's failure to comply with the Contract, the Contractor will be allowed an equal number of calendar days after the completion date for the completion of the work. The Department may at its discretion give the Contractor an extension of time for completing the work where the Contractor incurs delays for causes beyond his control.

c. Normal rainfall is not considered a cause qualifying for an extension of time. Claim for extension of time for all causes must be submitted by the Contractor in writing within **30 Days** after the claimed cause for the delay has ceased to exist.

Liquidated Damages

a. In the event the successful Contractor fails to complete project within the time specified, the Department and the public will sustain damages because of such delay in completion, the exact extent of which would be difficult to ascertain, and in order to liquidate such damage in advance it is agreed that the **sum of one-hundred dollars ($100.00) per day,** for each assessable calendar day on which the project has not been completed, is reasonable and the best estimate which the parties can arrive at as liquidated damages, and it is therefore agreed that said amount will be withheld from payments due the Contractor or otherwise collected from the Contractor as liquidated damages.

b. **Saturdays, Sundays, holidays and days whereas the Department has suspended work** shall not be assessable days.

Environmental Issues

Attention of the bidder is invited to the **Land Reclamation Act, Chapter 444, Laws of 1971, (House Bill 519)** and the necessity for compliance if applicable.

The Contractor shall take necessary precautions and shall schedule and conduct his operations so as to avoid or minimize siltation of streams while removing gravel there from.

Prohibition Of Employment Of Unauthorized Aliens:

a. Pursuant to RSMo 285.530 (1), no business entity or employer shall knowingly employ, hire for employment, or continue to employ an unauthorized alien to perform work within the state of Missouri. As a condition for the award of any contract or grant in excess of five thousand dollars by the state or by any political subdivision of the state to a business entity, or for any business entity receiving a state-administered or subsidized tax credit, tax abatement, or loan from the state, the business entity shall, by sworn affidavit and provision of documentation, affirm its enrollment and participation in a federal work authorization program with respect to the employees working in connection with the contracted services. Every such business entity shall sign an affidavit affirming that it does not knowingly employ any person who is unauthorized alien in connection with the contracted services. [RSMO 285.530 (2)] A copy of the affidavit referenced above is provided within this document.

E-Verify is an example of a federal work authorization program. Acceptable enrollment and participation documentation consists of **completed** copy of the E-Verify Memorandum of Understanding (MOU). For vendors that are not already enrolled and participating in a federal work authorization program, E-Verify is available at http://www.dhs.gov/xprevprot/programs/gc_1185221678150.shtm.