State	Proj. No.	Sheet No.
MO		

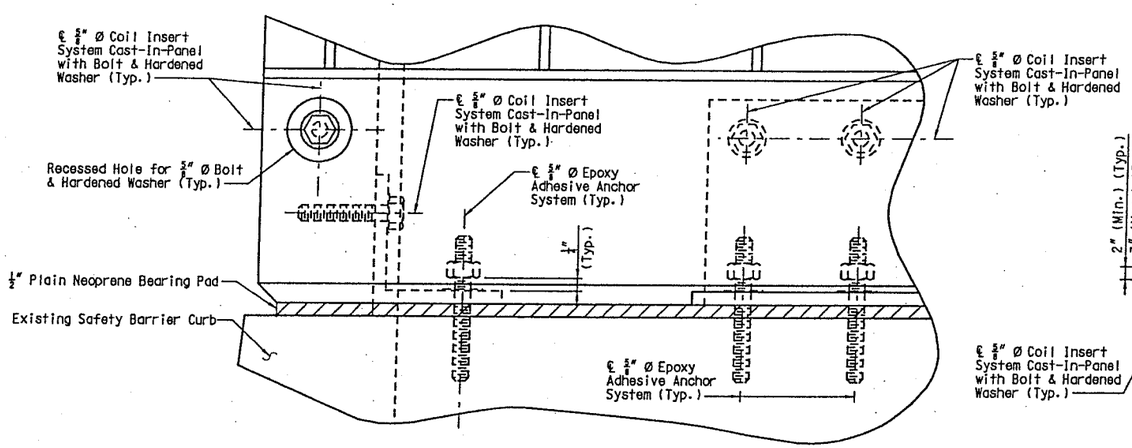

PART ELEVATION OF PRECAST CONCRETE AESTHETIC PANEL NEAR SAFETY BARRIER CURB

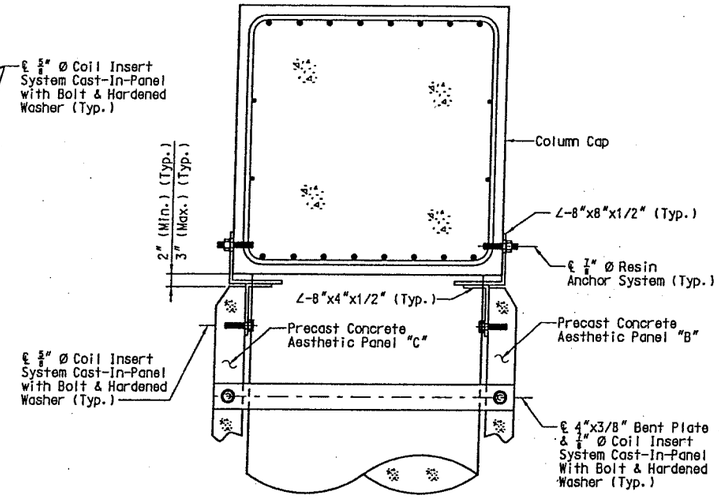

PART ELEVATION NEAR COLUMN CAP

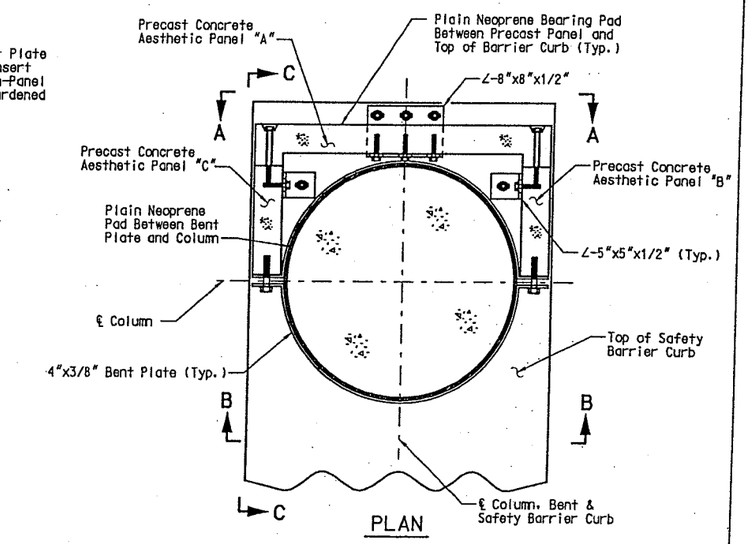

PLAN

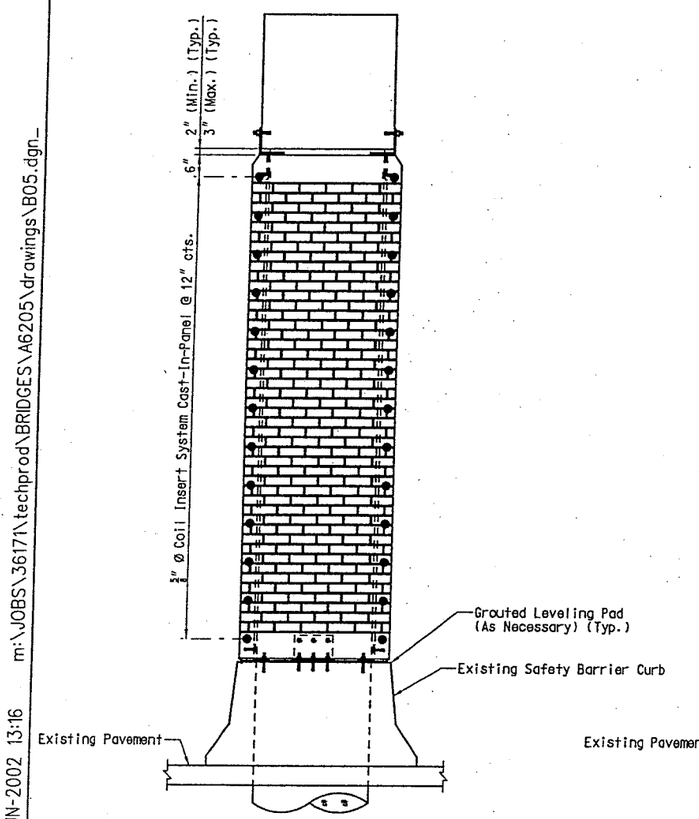

VIEW A-A

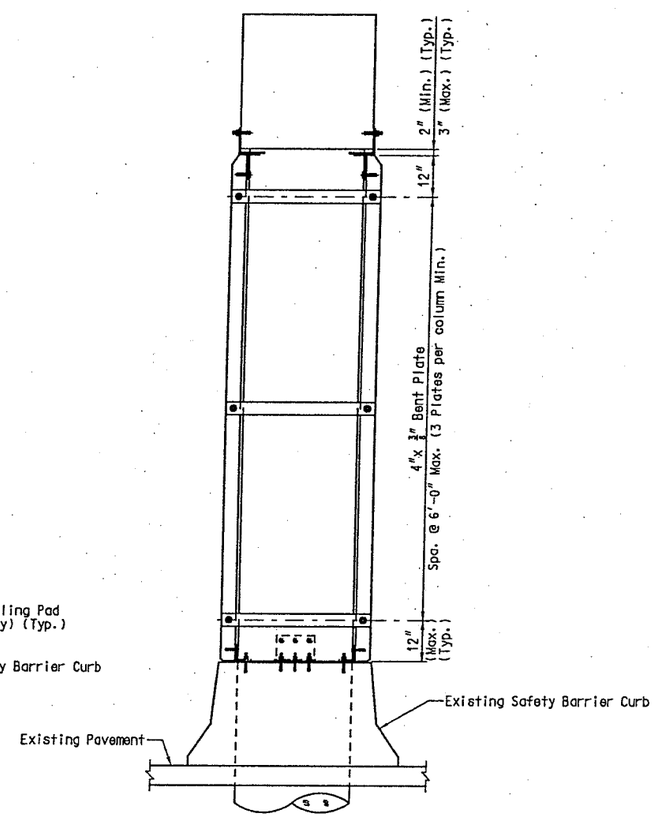

VIEW B-B

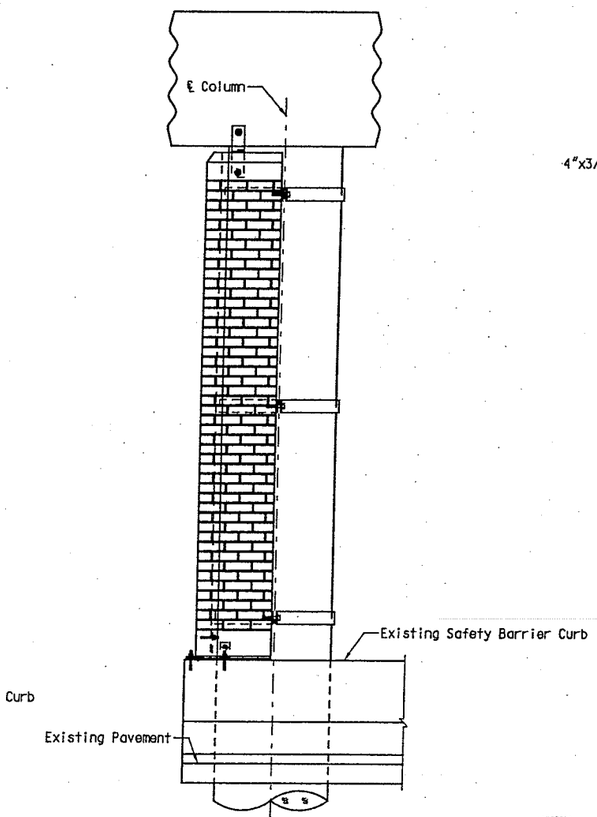

VIEW C-C

Notes

All fabricated structural steel shall be ASTM A709 Grade A36 except as noted. The fabricated structural steel shall be galvanized in accordance with ASTM A123.

All bolts, hardened washers and nuts shall be galvanized in accordance with ASTM A153.

Shop drawings will be required for the fabricated structural steel.

The 5/8" and 7/8" Ø resin anchor systems used in the top of the existing safety barrier curb and in the side of the column cap shall consist of one of the approved systems listed in the Special Provisions. The 5/8" and 7/8" Ø threaded rod used in the resin anchor systems shall be ASTM A36 and galvanized in accordance with ASTM A153.

Plain neoprene bearing pads shall be 60 durometer neoprene pads. The neoprene pad shall be bonded to the top of the safety barrier curb and to the 4"x3/8" bent plates with an epoxy adhesive as approved by the bearing manufacturer for bonding neoprene to concrete and to galvanized steel.

Payment for furnishing and installing fabricated structural steel, resin anchor systems, and plain neoprene bearing pads shall be included in the contract unit price for Precast Concrete Aesthetic Panels.

For details of fabricated structural steel, layout of resin anchor systems and layout of plain neoprene bearing pad, see Sheet No. 7.

For details of the Precast Concrete Aesthetic Panels, see Sheet No. 8.

STATE OF MISSOURI BRIAN CARLSON NUMBER E-24941 REGISTERED PROFESSIONAL ENGINEER

PRECAST CONCRETE AESTHETIC PANELS ON SAFETY BARRIER CURB

6/13/02

CITY OF ST. LOUIS

A6205

Detailed JUN 2002
Checked JUN 2002

HNTB

Note: This drawing is not to scale, follow dimensions.

USER: HUpshaw
PLOTTED: 13-JUN-2002 13:16 m:\JOBS\36171\techprod\BRIDGES\A6205\drawings\B05.dgn

State	Proj. No.	Sheet No.
MO		

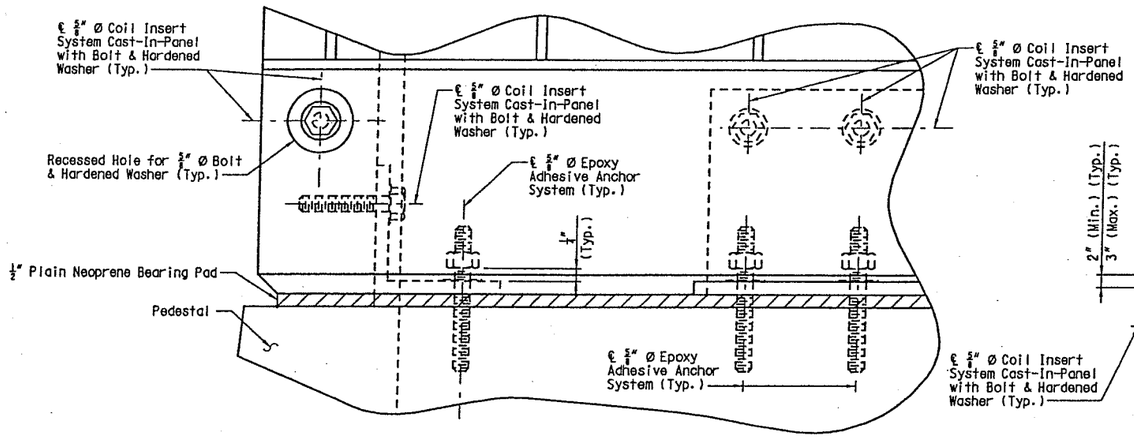

PART ELEVATION OF PRECAST CONCRETE AESTHETIC PANEL NEAR PEDESTAL

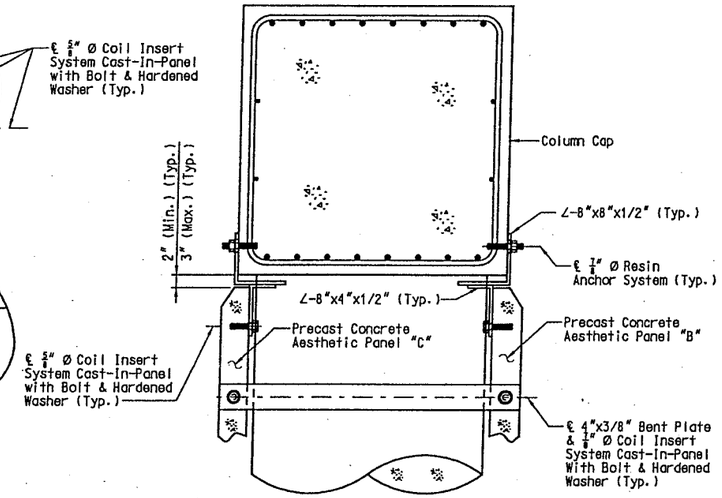

PART ELEVATION NEAR COLUMN CAP

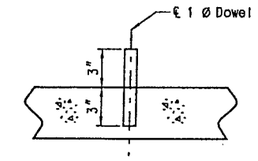

DETAIL OF RESIN ANCHOR SYSTEM IN EXISTING CONCRETE SLOPE PROTECTION

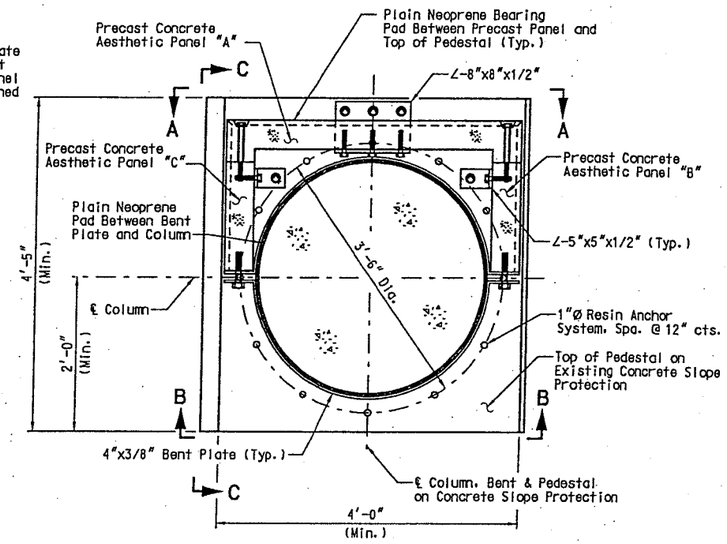

PLAN

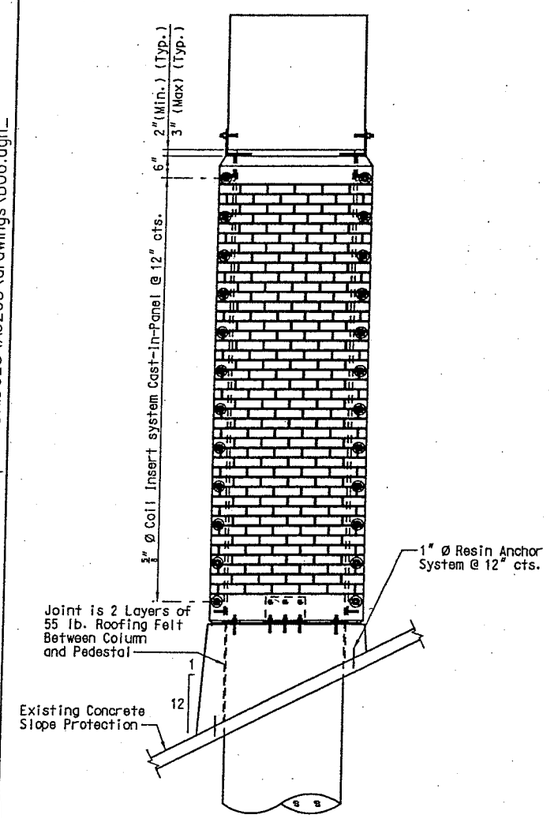

VIEW A-A

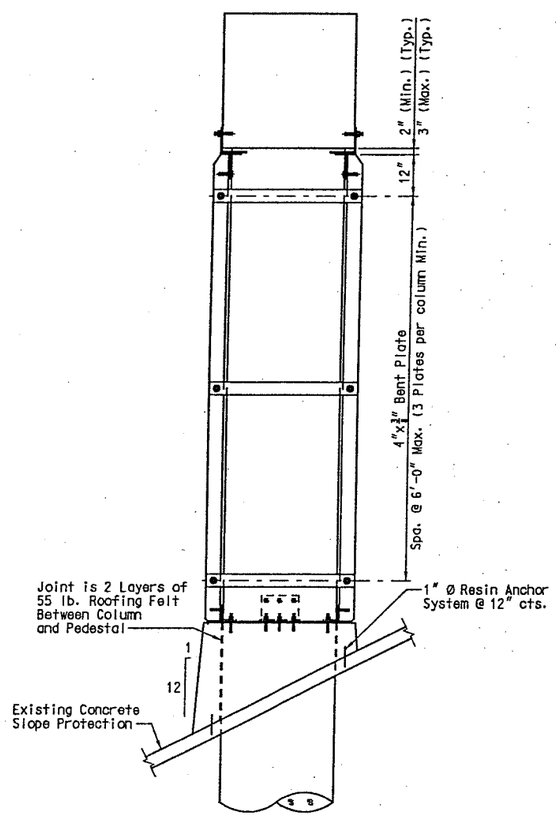

VIEW B-B

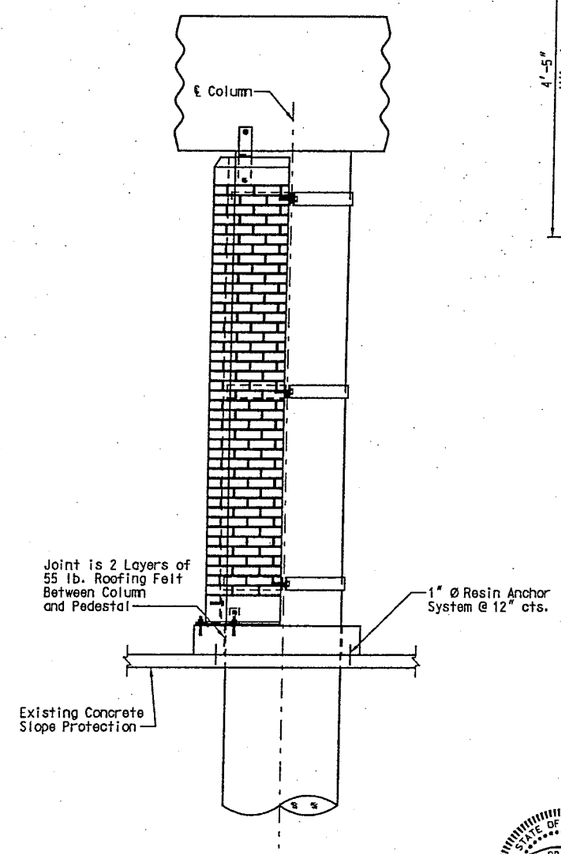

VIEW C-C

Notes

All concrete used in the pedestal on existing concrete slope protection shall be Class B.

All fabricated structural steel shall be ASTM A709 Grade A36 except as noted. The fabricated structural steel shall be galvanized in accordance with ASTM A123.

All bolts, hardened washers, lock washers and nuts shall be galvanized in accordance with ASTM A153.

Shop drawings will be required for the fabricated structural steel.

The material used for the 1" Ø resin anchor system shall meet the requirements of Section 1039.3 of the Missouri Standard Specifications.

The 5/8" and 1/2" Ø resin anchor systems used in the top of the Pedestal and in the side of the column cap shall consist of one of the approved systems listed in the special provisions. The 5/8" and 1/2" Ø threaded rod used in the resin anchor systems shall be ASTM A36 and galvanized in accordance with ASTM A153.

Plain neoprene bearing pads shall be 60 durometer neoprene pads. The neoprene pad shall be bonded to the top of the Pedestal to the 4"x3/8" bent plates with an epoxy adhesive as approved by the bearing manufacturer for bonding neoprene to concrete and galvanized steel.

Payment for funishing and installing the pedestal on existing concrete slope protection, fabricated structural steel, resin anchor systems, epoxy coated dowel bars and plain neoprene bearing pads shall be included in the contract unit price for Precast Concrete Aesthetic Panels.

For details of fabricated structural steel, layout of resin anchor systems and layout of plain neoprene bearing pad see Sheet No. 7.

For details of Precast Concrete Aesthetic Panels see, Sheet No. 8.

STATE OF MISSOURI BRIAN CARLSON NUMBER E-24941 REGISTERED PROFESSIONAL ENGINEER

6/13/02

PRECAST CONCRETE AESTHETIC PANELS ON CONCRETE SLOPE PROTECTION

CITY OF ST. LOUIS

A6205

Detailed JUN 2002
Checked JUN 2002

HNTB

Note: This drawing is not to scale, follow dimensions.

Sheet No. 6 of 9.

USER: HUpshaw
PLOTTED: 13-JUN-2002 13:16 m:\JOBS\36171\techprod\BRIDGES\A6205\drawings\B06.dgn

State	Proj. No.	Sheet No.
MO		

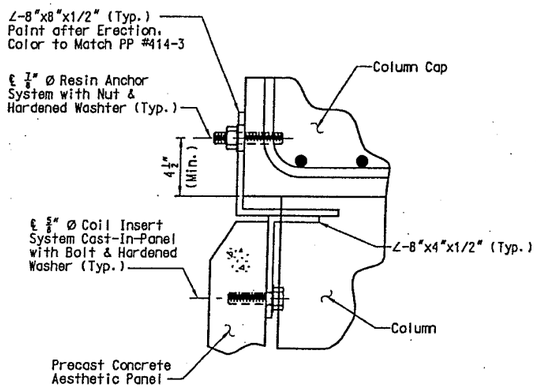

DETAIL OF AESTHETIC PANEL CONNECTION TO COLUMN CAP

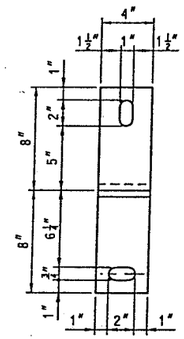

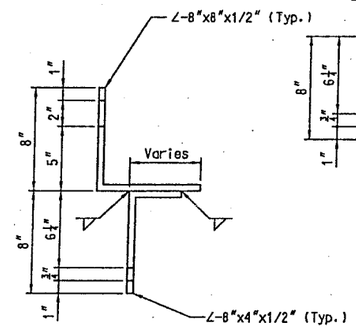

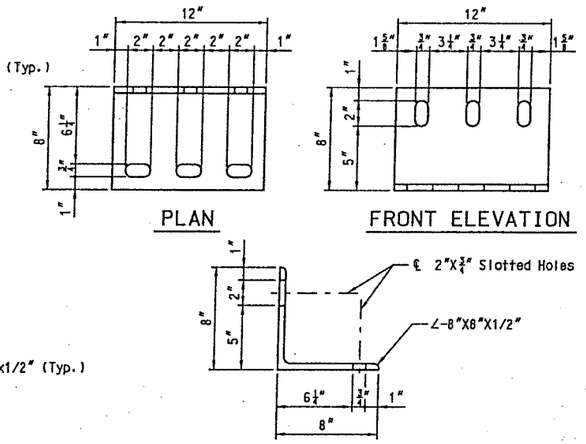

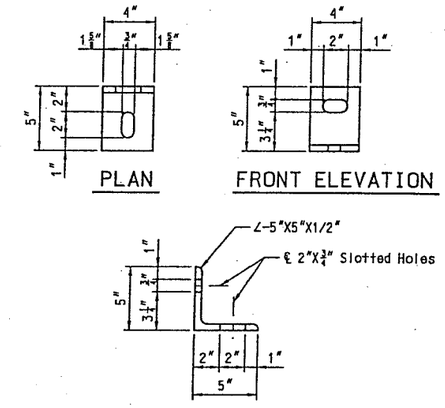

DETAIL OF CONNECTION ANGLES

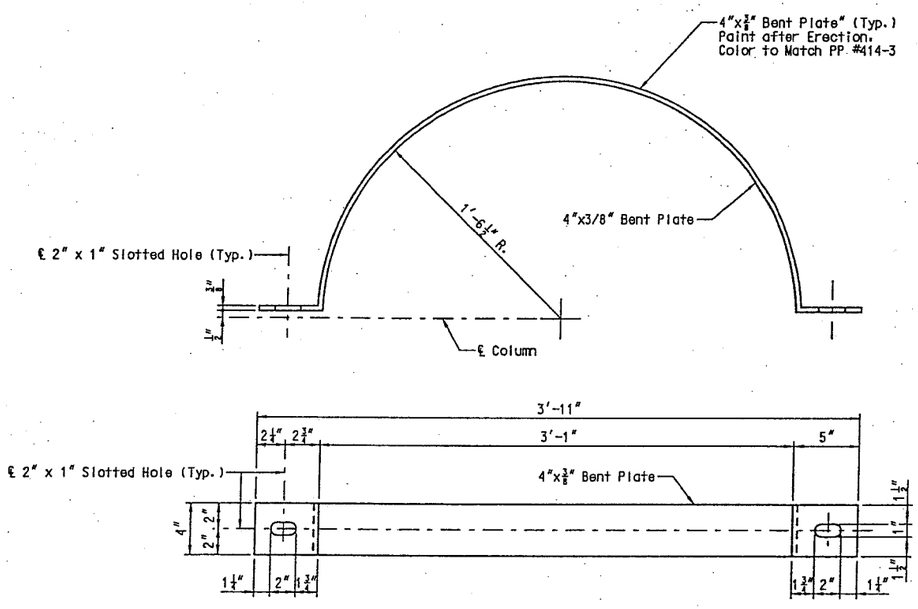

DETAIL OF BENT PLATE

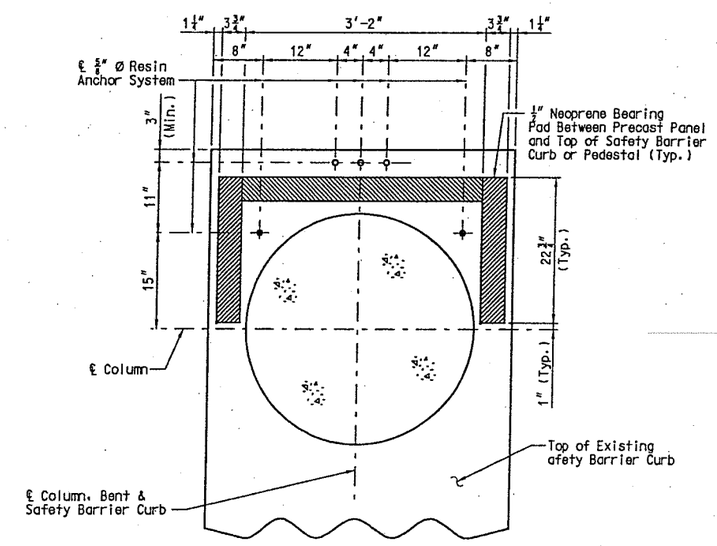

Anchor Bolt and Neoprene Bearing Pad Layout

(Top of Existing Safety Barrier Curb Shown. Pedestal on Concrete Slope Protection Similar)

STATE OF MISSOURI BRIAN CARLSON NUMBER E-24941 PROFESSIONAL ENGINEER

CONNECTION DETAILS

USER: HUpshaw
PLOTTED: 13-JUN-2002 13:16 m:\JOBS\36171\techprod\BRIDGES\A6205\drawings\B07.dgn

Detailed JUN 2002
Checked JUN 2002

HNTB

Note: This drawing is not to scale. follow dimensions.

Sheet No. 7 of 9 . 6/13/02 CITY OF ST. LOUIS

A6205

State	Proj. No.	Sheet No.
MO		

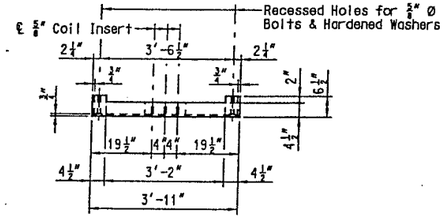

SECTION B-B

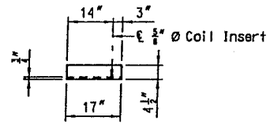

SECTION D-D

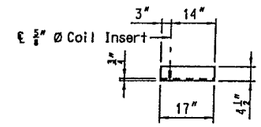

SECTION F-F

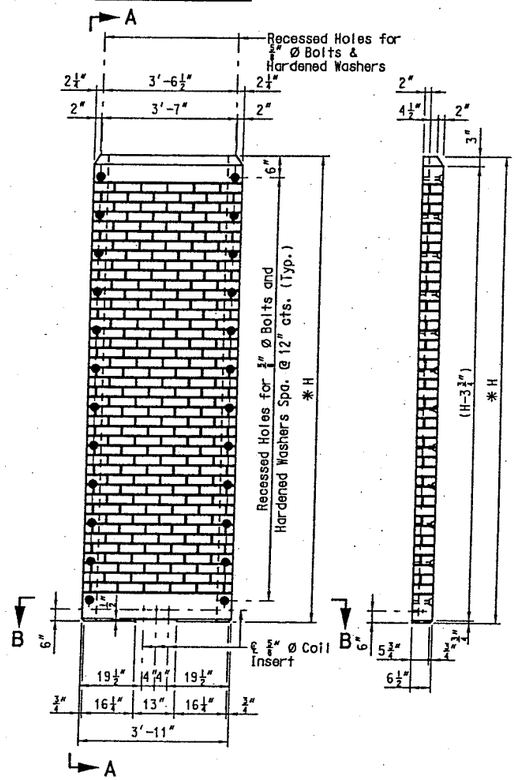

PLAN OF PRECAST PANEL "A"

VIEW A-A

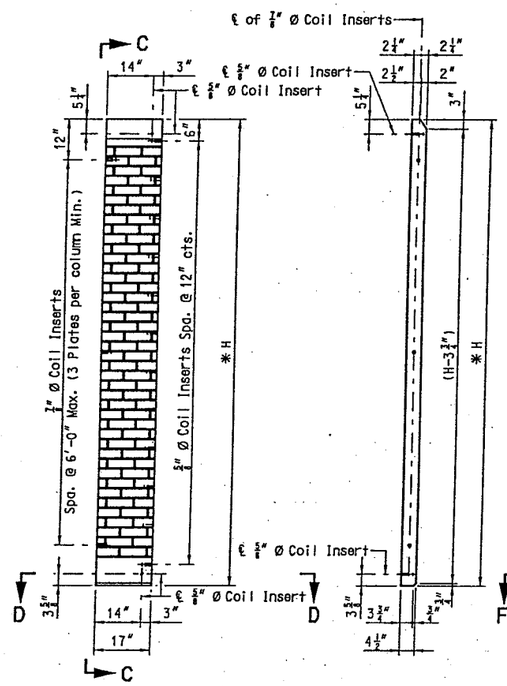

PLAN OF PRECAST PANEL "B"

VIEW C-C

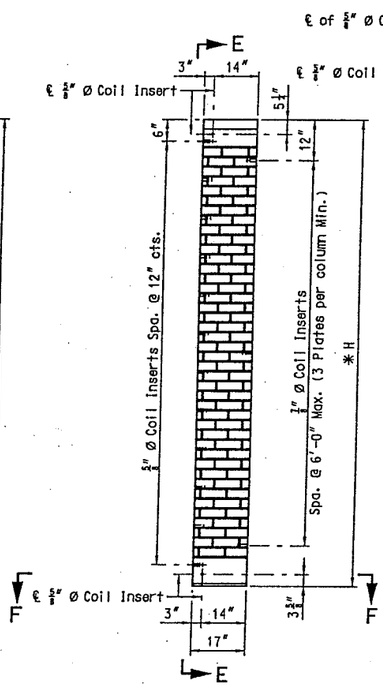

PLAN OF PRECAST PANEL "C"

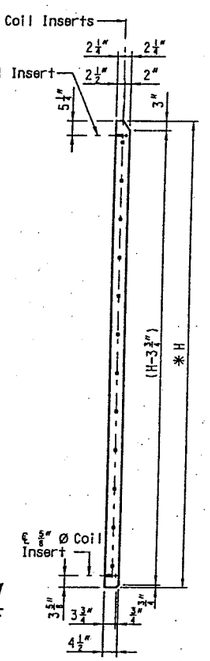

VIEW E-E

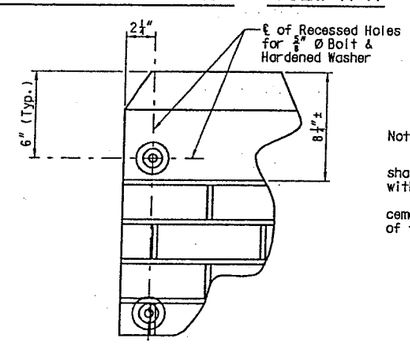

PART PLAN OF PRECAST CONCRETE AESTHETIC PANEL

(Top of panel shown, bottom similar)

Note:

Brick pattern formed into the precast panel shall consist of 2¼" x 7⅝" running bond brick with ⅜" mortar joints.

Recessed holes shall be filled with a non-shrink cementitious grout and finished flush with the surface of the precast panel prior to applying Aesthetic Stain.

* Contractor must verify dimension "H" prior to ordering Precast Concrete Aesthetic Panels

QUANTITY TABLE FOR PANELS AT BENT 2

Item		Quantity
Precast Concrete Aesthetic Panels	sq. foot	90

Note:
These quantities are included in the Estimated Quantities table on Sheet No. 1.

QUANTITY TABLE FOR PANELS AT BENT 3

Item		Quantity
Precast Concrete Aesthetic Panels	sq. foot	180

Note:
These quantities are included in the Estimated Quantities table on Sheet No. 1.

QUANTITY TABLE FOR PANELS AT BENT 4

Item		Quantity
Precast Concrete Aesthetic Panels	sq. foot	200

Note:
These quantities are included in the Estimated Quantities table on Sheet No. 1.

QUANTITY TABLE FOR PANELS AT BENT 5

Item		Quantity
Precast Concrete Aesthetic Panels	sq. foot	220

Note:
These quantities are included in the Estimated Quantities table on Sheet No. 1.

Notes

PRECAST CONCRETE PANELS:
Concrete used for the precast concrete panels shall be class A1 with F'c = 5,000 psi.
Anchorage devices for lifting panels may be cast in the backside of the panels, provided that they are shown on the shop drawings and approved by the Engineer.

REINFORCING STEEL:
Minimum clearance to reinforcing steel shall be 1-1/2", unless otherwise shown.
Hooks and bends shall be in accordance with the C.R.S.I. manual of standard practice for detailing reinforced concrete structures, stirrup and tie dimensions.
Welded wire fabric or welded deformed bar mats providing 0.6 sq. in./ft. shall be used.
Payment for reinforcing steel shall be fully covered by the contract unit price for Precast Concrete Aesthetic Panels.

ANCHORAGE INSERTS:
The ⅝" and ⅞" Coil inserts shall be galvanized in accordance with ASTM A123.
Coil inserts shall have a concrete pull-out strength (ultimate load) of at least 5,000 pounds in 5,000 psi concrete.
The ⅝" and ⅞" Ø coil inserts required for the Pecast Concrete Aesthetic Panel connections shall be located on the shop drawings.
Payment for the ⅝" and ⅞" Ø coil inserts shall be included in the contract unit price for Precast Concrete Aesthetic Panels.

STATE OF MISSOURI BRIAN CARLSON NUMBER E-24941 PROFESSIONAL ENGINEER

6/13/02

PRECAST CONCRETE AESTHETIC PANEL DETAILS

USER: HUpshaw
PLOTTED: 13-JUN-2002 13:16 m:\JOBS\36171\techprod\BRIDGES\A6205\drawings\B08.dgn

Detailed JUN 2002
Checked JUN 2002

HNTB

Note: This drawing is not to scale, follow dimensions.

CITY OF ST. LOUIS

A6205

State	Proj. No.	Sheet No.
MO		

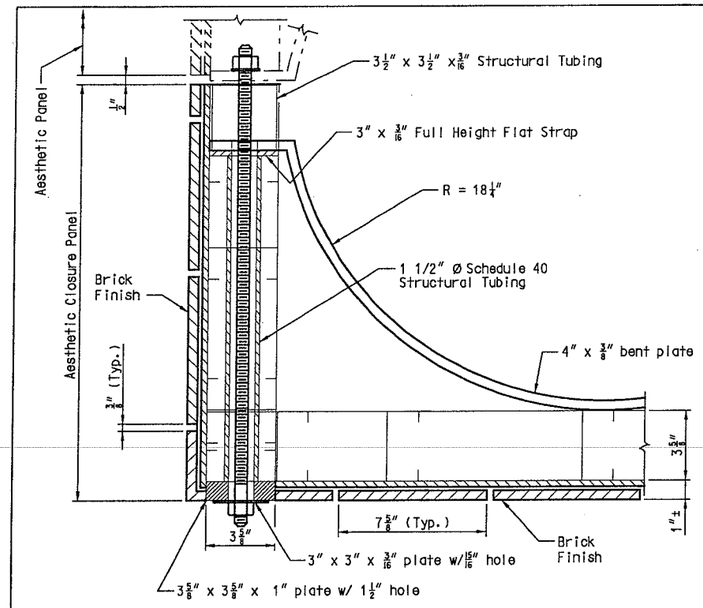

SECTION A-A

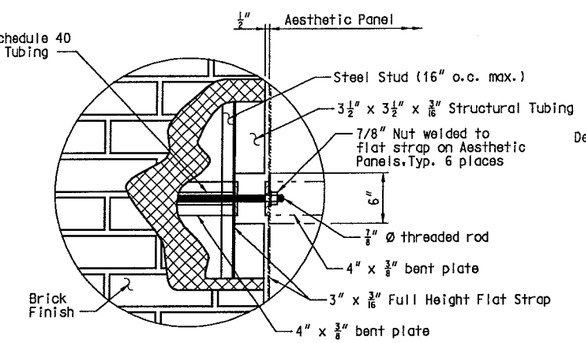

VIEW B-B

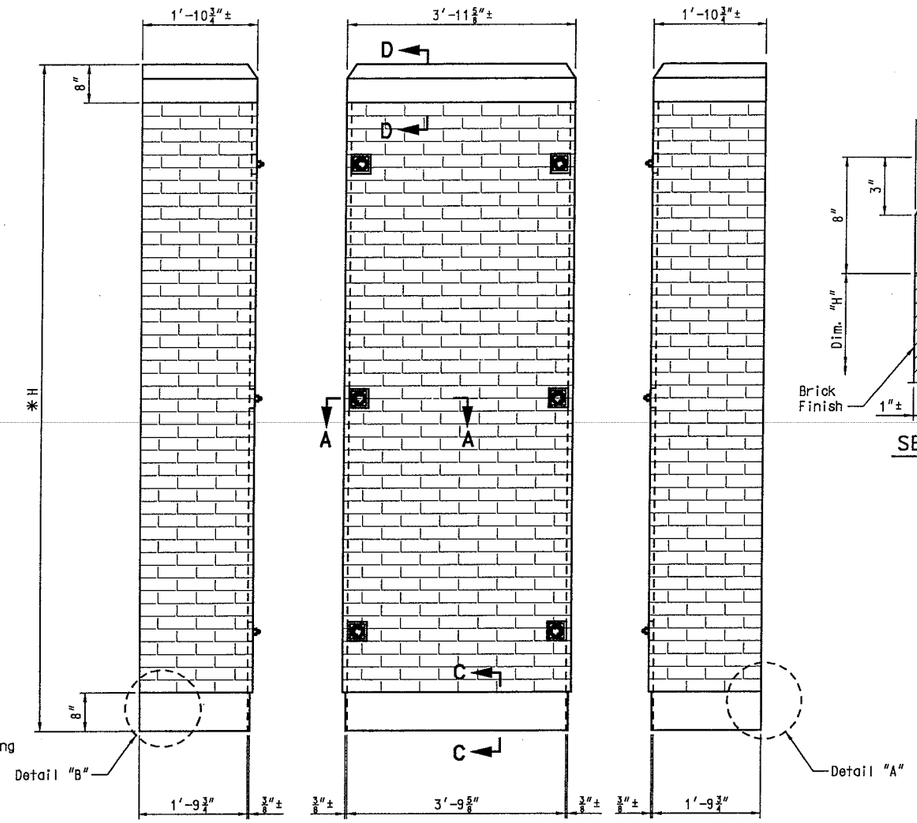

VIEW E-E VIEW F-F VIEW G-G

* Contractor must verify dimension "H" and location of 3/8" Bent Plates on Aesthetic Panels prior to fabricating Aesthetic Closure Panels.

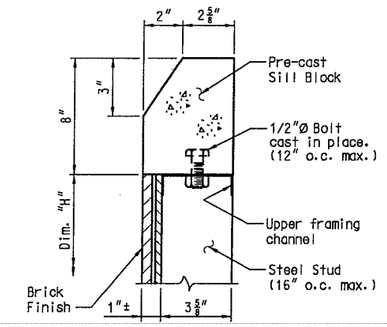

SECTION D-D

QUANTITY TABLE FOR PANELS AT BENT 2

Item		Quantity
Aesthetic Closure Panels	sq. foot	124

QUANTITY TABLE FOR PANELS AT BENT 3

Item		Quantity
Aesthetic Closure Panels	sq. foot	187

QUANTITY TABLE FOR PANELS AT BENT 4

Item		Quantity
Aesthetic Closure Panels	sq. foot	231

QUANTITY TABLE FOR PANELS AT BENT 5

Item		Quantity
Aesthetic Closure Panels	sq. foot	258

Note:
These quantities are not included in the Estimated Quantities table on Sheet No. 1.
These quantities are net surface areas that do not include the 4 5/8" thickness of the front face. The corresponding gross surface area at Bents 2, 3, 4 and 5 are 138, 208, 256 and 287 sq. feet respectively.

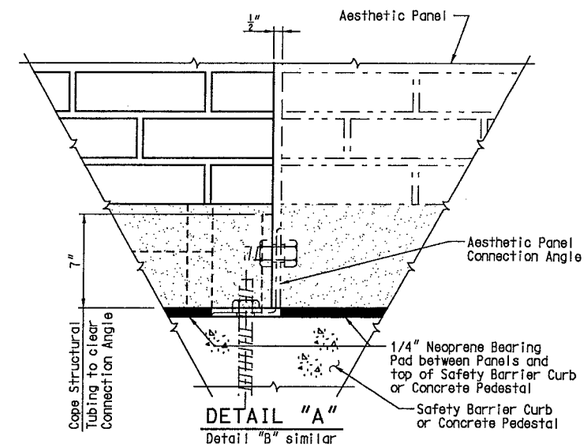

DETAIL "A"
Detail "B" similar

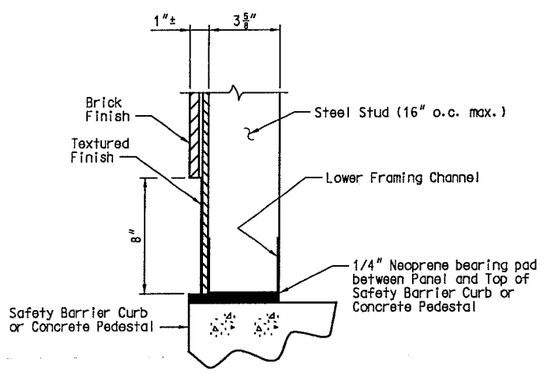

SECTION C-C

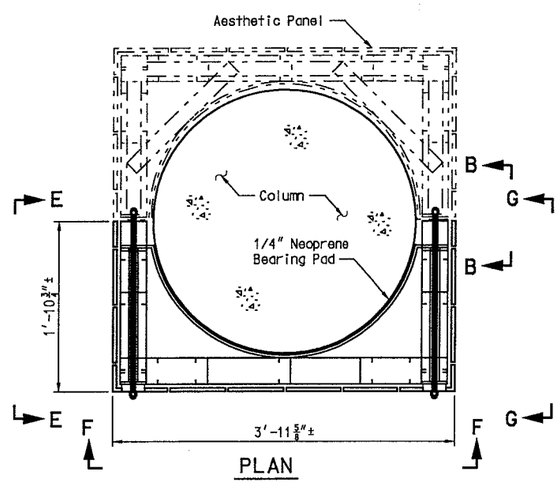

PLAN

Notes:
Aesthetic Closure Panels shall be internally braced to prevent deformation during handling, installation, and subsequent removals and reinstallations.
All fabricated structural steel shall be ASTM A709 Grade 36 except as noted. The fabricated structural steel shall be galvanized in accordance with ASTM A123.
All nuts and threaded rod shall be galvanized in accordance with ASTM A153.
Shop drawings will be required for the fabricated structural steel and aesthetic panels.
Plain neoprene bearing pads shall be 60 durometer neoprene pads. The neoprene pad shall be bonded to the top of the Concrete Pedestal or Safety Barrier Curb and to the 4" x 3/8" bent plates with an epoxy adhesive as approved by the manufacturer for bonding neoprene to concrete and galvanized steel.
Payment for furnishing and installing the fabricated structural steel, steel framing, threaded rods and plain neoprene bearing pads shall be included in the contract price for Aesthetic Closure Panels.
Threaded rods shall be 7/8" diameter ASTM A709 Grade 50W steel with two ASTM A194-2, 2H or A563-C, C3, D, DH, DH3 heavy hexagon nuts.
Aesthetic Closure Panels shall be fabricated and erected in accordance with the Special Provisions.
Brick finish shall consist of 2 1/4" x 7 5/8" running bond brick with 3/8" mortar joint.
Installation of the Aesthetic Closure Panels requires removal of the 4" x 3/8" bent plates securing the Aesthetic Panels to the columns. The stability of the Aesthetic Panels shall be maintained during removal of the bent plates and installation of the Aesthetic Closure Panels.
Aesthetic Closure Panel dimensions shown are based on Aesthetic Panel shop drawings.

STATE OF MISSOURI BRIAN CARLSON NUMBER E-24941 REGISTERED PROFESSIONAL ENGINEER
9/18/03

AESTHETIC CLOSURE PANEL DETAILS

USER: hupshaw
PLOTTED: 18-SEP-2003 13:21 m:\jobs\36171\techprod\Bridges\A6205\Drawings\B07a.dgn

Detailed SEP 2003
Checked SEP 2003

HNTB

Note: This drawing is not to scale, follow dimensions.

CITY OF ST. LOUIS

A6205