ROUTE	STATE	DISTRICT
I-64	MO	6
JOB NO.	J6I0978	
COUNTY	STLCO/STLCITY	

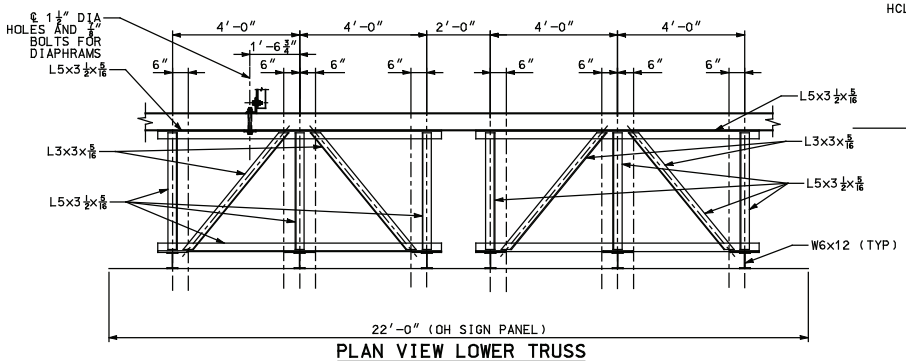

PLAN VIEW LOWER TRUSS

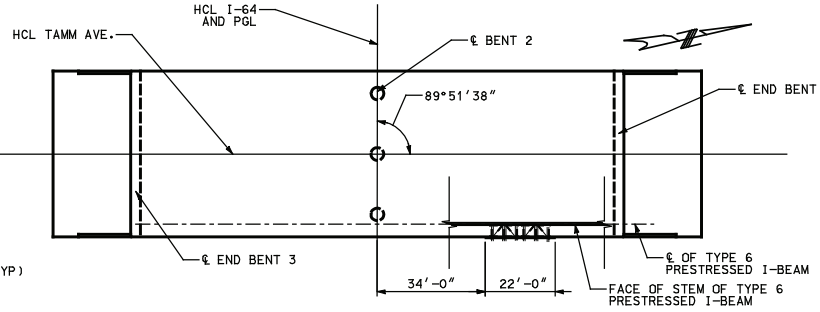

SIGN LOCATION

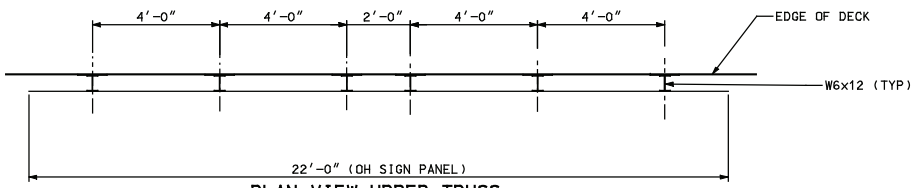

PLAN VIEW UPPER TRUSS

SIGN NOTES

CONTRACTOR SHALL VERIFY DIMENSIONS BEFORE FABRICATION.

SIGN PANEL SHALL BE PLACED LEVEL AND PLUM, SIGN SUPPORTS MAY BE PLACED PARALLEL TO BOTTOM OF THE BEAM.

SIGN TO BE PLACED PARALLEL TO BOTTOM FLANGE.

ALL CONNECTIONS TO BE 3/4" DIA. BOLTS PER MODOT SPECS, EXCEPT AS NOTED. WHEN DRILLING HOLES, MISS DECK REBAR.

BOLT ANCHORAGES SHALL BE CAST IN PLACE BOLTS OR ANCHORAGE INSERTS APPROVED BY THE ENGINEER.

CONTRACTOR SHALL VERIFY STRAND LOCATIONS AND PLACE HOLES FOR THE 3/4" DIA ANCHOR BOLTS TO CLEAR STRANDS A MINIMUM OF 1 1/2".

SEE MODOT STANDARD SHEET 903.03BC FOR SIGN MOUNTING DETAILS.

ALL SUPPORT MATERIALS INCLUDING BOLTS, NUTS AND WASHERS SHALL BE GALVANIZED.

FABRICATED STRUCTURAL STEEL SHALL BE ASTM A709 GRADE 36 EXECT AS NOTED.

B1 BARS SHALL BE LOCATED PRIOR TO FORMING SLAB. DRILLED HOLES SHALL CLEAR MARKED BAR LOCATIONS A MINIMUM OF 2".

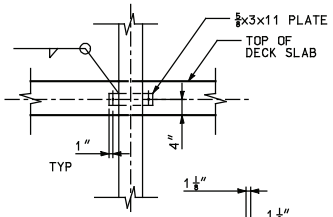

VIEW C

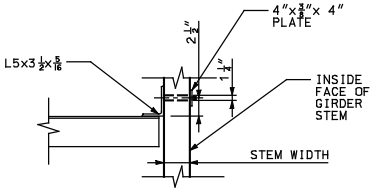

ELEVATION

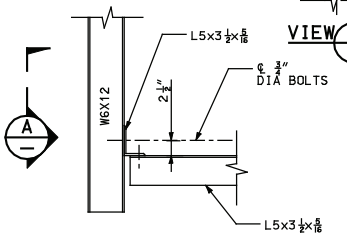

DETAIL A

TYPICAL AT PANEL MOUNTING POST

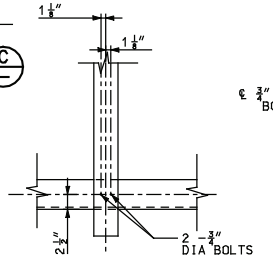

SECTION A

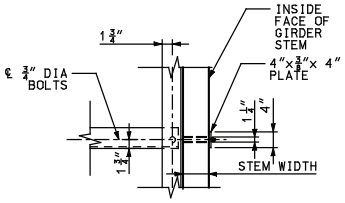

PLAN

DETAIL B

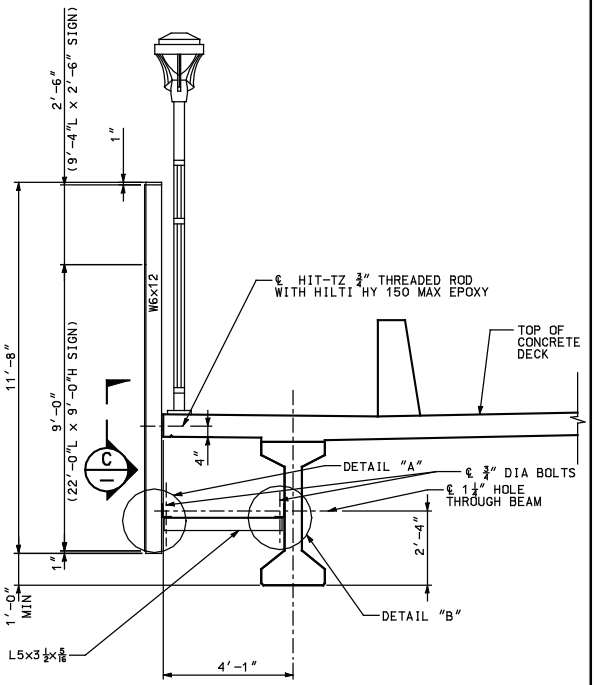

TYPICAL SECTION

CITY OF ST. LOUIS

A8027

DESIGNED BY: TDM	ISSUE RECORD		
	NO.	DESCRIPTION	DATE
DRAFTED BY: TDM	C	100% REVIEW SUBMITTAL	15JUN07
	D	RELEASED FOR CONSTRUCTION	31JUL07
CHECKED BY: LFE	AB	AS-BUILT FDC-713	12MAR10

PARSONS

Gateway Constructors
Granite • Fred Weber • Millstone Bangert

THE NEW I-64

THE NEW I-64 PROJECT
BRIDGE 27
TAMM AVENUE OVER I-64
OVERHEAD SIGN DETAILS 1

MoDOT

DRAWING NUMBER
S3-27-29

AS-BUILT

File Name: P:\I-64_AS-BUILTS\BRS3\S3-27-29.DGN
User: PARSONS
Time Plotted: 12:01:03 PM
Date Plotted: 8/23/2010
Pen Table: I-64_HALFSIZEBW-DATE.TBL
Plot Driver: 11X17_PDF_AB.PLT

ROUTE	STATE	DISTRICT
I-64	MO	6
JOB NO. J6I0978		
COUNTY STLCO/STLCITY		

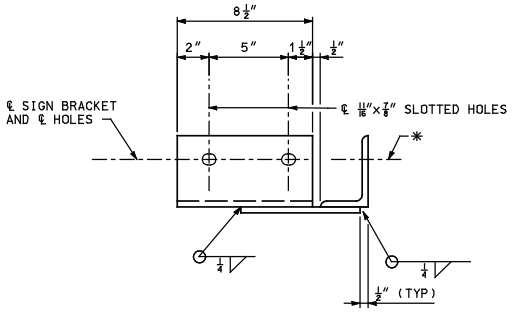

SIGN BRACKET TOP VIEW

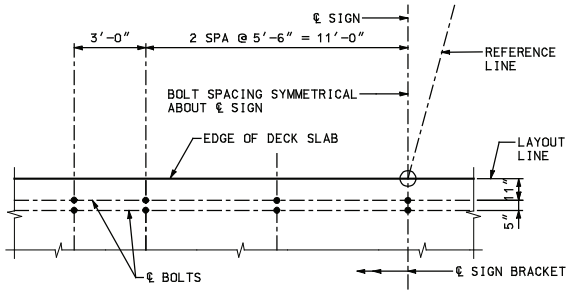

INSERT SPACING PLAN

SMALL SIGN

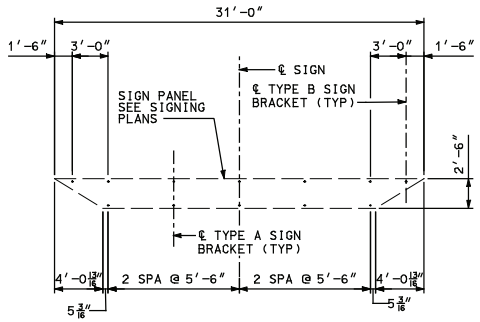

SIGN BRACKET SPACING ELEVATION

SMALL SIGN

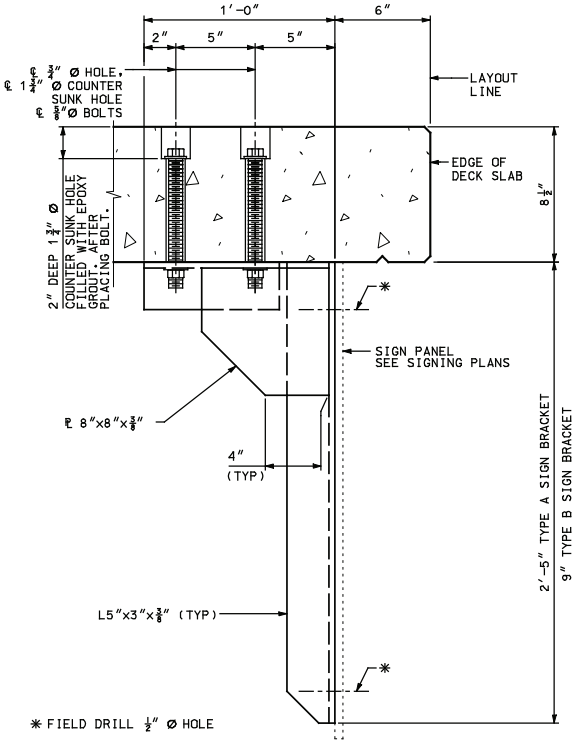

THRU-DECK SIGN BRACKET DETAIL

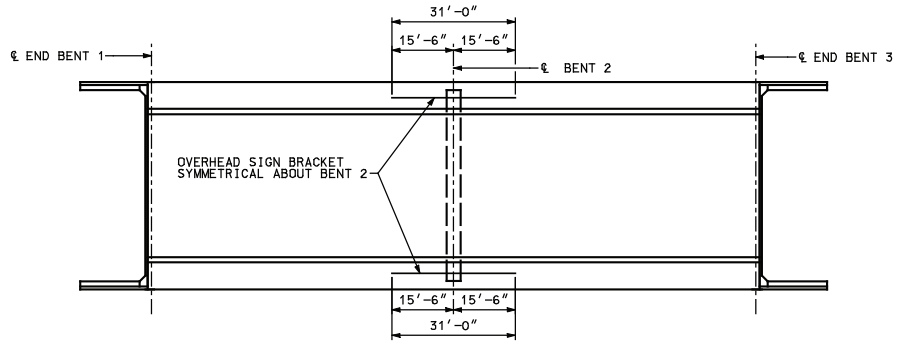

SIGN LAYOUT PLAN

(SCHEMATIC)

NOTES:

STEEL FOR SIGN BRACKETS SHALL BE ASTM A709 GRADE 36.

WELDING AND WELD FILLER MATERIAL SHALL BE IN ACCORDANCE WITH THE AWS D1.1 WELDING CODE.

SIGN BRACKETS SHALL BE HOT DIP GALVANIZED AFTER FABRICATION IN ACCORDANCE WITH ASTM A153 CLASS C.

LOCATE REINFORCEMENT BEFORE DRILLING TO AVOID CUTTING. ADJUST HOLE LOCATIONS AS NECCESARRY.

BOLTS SHALL BE 5/8" DIAMETER WITH A WASHER ON TOP AND OVERSIZED WASHER AND LOCKWASHER ON THE BOTTOM. BURR THE BOLT THREADS AFTER INSTALLATION.

ALL HARDWARE SHALL BE GALVANIZED.

GROUT SHALL BE IN ACCORDANCE WITH SPECIFICATION 703.3.2.9.

SIGN BRACKETS SHALL BE INSTALLED PLUMB IN THE BRIDGE TRANSVERSE DIRECTION, SHIM AS REQUIRED.

CITY OF ST. LOUIS | A8027

AS-BUILT

DESIGNED BY: BJB	ISSUE RECORD		
	NO.	DESCRIPTION	DATE
DRAFTED BY: CAL	D	RELEASED FOR CONSTRUCTION	31JUL07
	1	THRU DECK INSERTS	04MAR08
CHECKED BY: VTG	AB	AS-BUILT FDC-713	12MAR10

PARSONS

Gateway Constructors
Granite • Fred Weber • Millstone Bangert

THE NEW I-64

THE NEW I-64 PROJECT
BRIDGE 27
TAMM AVENUE OVER I-64
OVERHEAD SIGN DETAILS 2

MoDOT

DRAWING NUMBER
S3-27-30

File Name: P:\I-64_AS-BUILTS\BRS3\S3-27-30.DGN
User: PARSONS
Time Plotted: 12:01:06 PM
Date Plotted: 8/23/2010
Pen Table: I-64_HALFSIZEBW-DATE.TBL
Plot Driver: 11X17_PDF_AB.PLT