MISSOURI DEPARTMENT OF TRANSPORTATION
INFORMAL QUOTE GUIDELINES AND DOCUMENTATION
FOR PURCHASES FROM $3,000 TO $24,999.99
THIS IS NOT AN ORDER

REQUEST FOR QUOTATION

It is the vendor's responsibility to read and comply with all conditions, specifications, and instructions outlined in this document. This document and any subsequent attachments shall supersede all confirmation forms, receipts, or any other paperwork needed to secure materials, equipment, or services.

TODAY'S DATE: **MARCH 11, 2009**	**DUE BY (DATE AND TIME):** **MARCH 24, 2009 1:00 PM CDST**	F.O.B. REQUIREMENTS: **DESTINATION**
TO BE DELIVERED/COMPLETED NO LATER THAN: **60 DAYS FROM NOTICE TO PROCEED**	**QUOTATION:** **D5-09-033Q** THIS QUOTATION # SHOULD BE REFERENCED ON ALL MAILING LABELS, ENVELOPES, AND ANY OTHER CORRESPONDENCE.	BUYER NAME: **COREY DUEMMEL** PHONE NUMBER: **573-526-6956** FAX NUMBER: **573-526-6796**

District Mailing Address: **MoDOT District 5 Office** **1511 Missouri Blvd.** **P.O. Box 718** **Jefferson City, MO 65102**	Delivery Locations: **Camdenton Maintenance Building** **P.O. Box 1377, Lake Rd 589** **Camdenton, MO 65020**

ALL QUOTES MUST BE EXTENDED AND TOTALED

1.0 SCOPE OF WORK

1.1 Remove all existing roofing materials from Maintenance building. Block all openings flush with roof slope. Existing shingles and materials shall be discarded in an approved landfill. All costs associated with the landfill process are the responsibility of the contractor.

1.2 Replace with new drip edge, 30 lb (#) roofing felt paper or equal (i.e. Titanium Roofing Under-layment) and metal roofing; as well as any additional requirements that might become apparent. (e.g. damaged ply board).

2.0 REQUIREMENTS

2.1 The surface area of the existing and replacement roof for our building is:

BUILDING #1: CAMDENTON MAINTENANCE BUILDING

2.1.1 Approximately 1,600 sq feet for the Maintenance Bldg.
2.1.2 Approximately 330 linear feet of lower drip edge and approximately 310 linear feet of upper drip edge.
2.1.3 Install 76 linear feet of gable trim.
2.1.4 Contractor is responsible for verification of all dimensions and the sizes of roof penetrations.

2.2 Roofing metal and felt paper will only be accepted in unopened manufacturer labeled bundles, or rolls. Materials must be stored in a dry location as to avoid damage from weather while not in use.

2.2.1 Install Ribbed Metal Roof panels with neoprene gasket screws, same manufacturing color as panels.
2.2.2

2.3 Labor to <u>remove</u> and discard existing roof, felt paper and drip edge down to the ply wood sheeting. Labor to install felt paper and metal roof. All material to be supplied by the contractor.

2.3.1 Camdenton Maintenance Building: One (1) layer of shingles

2.4 Install new flashing to all plumbing stacks, walls, protrusions and breaks as necessary (if any).

2.5 The contractor must replace any rotted sheeting with the same size and thickness of the existing sheeting. Pricing will be established on a per sheet basis. The Area Superintendent and the Construction Manager will determine the number of sheets that need to be replaced prior to the commencement of the new roof. Sheathing clips must be used between sheets between framing members is sheets are required. Any additional services of this nature will only be done upon approval of

the superintendent as well, prior to any work being done.

2.6 Weather Conditions: Proceed with roof work only when weather conditions are in compliance with manufacture's recommendations and when substrate is completely dry.

2.7 Work site must be maintained in an organized an orderly fashion during work and at the end of every day.

2.8 Contractor is responsible for supplying their own tools and equipment. The use of the Missouri Department of Transportation equipment is prohibited.

2.9 Contractor is responsible for complete and functional roofing system.

3.0 INSTALLATION

3.1 Place drip edges and metal flashings tight with fascia boards or structure. Weather lap joints 2 inches and seal with plastic cement. Secure flange with nails spaced 8 inches on center.

3.2 All bed flanges must be placed in a thick coat of bituminous roofing cement where required for waterproof performance. All flashing must be formed to protect roofing material from physical damage and shed water. Must be laid square and accurate to profile and free from defects. Hem exposed edges of flashings minimum of ¼ inch on underside. (where applicable).

3.3 Install roofing metal in accordance with manufacturer's instructions and specifications

3.4 Place metal roofing in straight coursing.

3.5 Contractor to install foam closure strip at top and bottom of sheeting.

3.6 Contractor to install a metal drip edge over top of metal sheeting on front and back of building and metal caps over side parapet walls. Drip edge should extend under EPDM roofing materials and sealed from elements. Drip edge on top of metal roof where it meets EPDM shall be of the same material and color of roof; it must overlap metal roof a minimum of four inches.

4.0 MATERIALS

4.1 29 gauge Ribbed Metal roofing and color matching minimum 1" screws with neoprene gaskets.

4.2 Fasteners and Anchors: Hot dipped galvanized steel for humidity and treated wood locations, unfinished steel elsewhere.

4.3 Plywood Roof Sheathing: APA Rated Sheathing Structural I Exposure, Durability 1 un-sanded; ½" thick, 48 x 96 inch sized sheets with square edges, unless existing sheathing is different.

4.4 **30 lb, non-perforated asphalt felt paper** required meeting ASTM D226 as recommended for use in waterproofing and construction of built-up roofs, and or equivalent.

4.5 Sheet Flashings: ASTM A361/A361M; 24 gauge thick steel with minimum 1.25-oz/sq ft galvanized coating.

4.6 All material will need submittals for prior acceptance.

4.7 Contractor shall furnish all materials such as ridge cap, roof metal, rake edges, foam closures, screws, flashing and caulking, and all other materials needed to ensure a complete and professional job.

5.0 SUBMITTALS

5.1 Awarded bidder must submit samples of color, finish and aesthetic of various roofing metal colors prior to ordering (Color to be determined.) indicating color range and finish texture/pattern for color selection.

5.2 Provide data on metal types, finishes and characteristics.

5.3 Submit two (2) samples, 12" x 12" inches in size illustrating metal roofing mounted on plywood backing, illustrating typical seams, external corner and valley material, finish and color.

6.0 AWARD OF CONTRACT

6.1 Award of this bid/quote/proposal will be made on the 'Lowest and Best' principle of award. All other line Items will be determined on an as need basis according to the approval from the Buildings and Grounds Manager before work is to proceed.

6.2 Awarded bidder must be compliant with House Bill 600, be in 'Good Standing' with the Secretary of State's office, provide Affidavit for Worker Eligibility and Affidavit-Applicant Failure to Prove Lawful Prescence. If bidder is not in compliance, they

will be given around seven days from notification to become qualified.

6.3 Awarded bidder will be required to fill out necessary closeout, payroll and other forms.

7.0 INSPECTION AND ACCEPTANCE

7.1 Final inspection and approval will be made by the Building and Grounds Manager prior to final payment.

7.2 Final Cleaning: Clean debris from roofs, gutters, downspouts and drainage systems. Clean site, sweep paved areas and rake clean landscaped surfaces free from foreign objects, such as nails, etc that could harm the department's equipments. Contractor must remove waste and surplus materials, rubbish and construction facilities from site.

8.0 WARRANTIES

8.1 Execute and assemble transferable warranty documents from Subcontractors, suppliers and manufacturers.

8.2 Installing contractor shall certify that sheet metal work has been installer per National Sheet Metal System's printed details and specifications. Manufacturer warrants sheet metal fabrications are warranted to be free of defects in material and workmanship for a period of five (5) years from date of completion.

8.3 Provide manufacturer's warranty for standard 30 year finish warranty for standard Siliconized-Polyester coated finishes against peeling, chalking, fading, checking and crazing, commencing upon date of final completion.

8.4 No other warranties either expressed or implied are acceptable unless so stated in writing.

8.5 Submit prior to final Application for Payment.

9.0 PROTECTION

9.1 Protect installed products until completion of project.

9.2 Maintain pre-finished surfaces in undamaged condition until date of final completion. Repair or replace damaged components, any touch-up to be indistinguishable from undamaged surface/finish.

9.3 Upon completion of work, a final inspection by the owner's representative shall be made. Any necessary corrective actions will be noted and the installing contractor shall make corrections within five (5) working days. Upon acceptance of the project, any applicable warranties shall be presented to the owner's representative.

10.0 CONTACTS/ADDRESSES

10.1 Facilities Manager: Paul Loftin (573) 751-7850 / (573) 644-3839

Camdenton Maintenance Building
P.O. Box 1377, Lake Rd 589
Camdenton, MO 65020

Additional Bid Requirements

- Awarded bidder MUST carry Liability Insurance in the amount equal to or greater than $1 million as listed in the Terms and Conditions. General Liability Insurance form will need to be provided to awarded bidder.
- Prevailing Wage must be adhered to following.
- All forms must be signed.

Additional Notes

Prior to issuance of 'Notice to Proceed,' awarded bidder MUST:

1. *Be in compliance with House Bill 600, Section 34.040.6 RSMo, which states MoDOT is precluded from contracting with a vendor or its affiliate who makes sales at retail of tangible personal property or for the purpose of storage, use or consumption in this state but fails to collect and properly pay the tax as provided in RSMo 144, their number is (573) 751-9268.*

2. *Be in good standing with the Secretary of State's office prior to issuance of 'Notice to Proceed.' Their phone number is (573) 751-4936.*

3. *Pursuant to 285.530 RSMo, the bidder must affirm its enrollment and participation in a federal work*

authorization program with respect to the employees proposed to work in connection with the services requested herein by

- *Submitting a completed, notarized copy of AFFIDAVIT OF WORK AUTHORIZATION, and*
- *Proving documentation affirming the bidder's enrollment and participation in a federal work authorization program (see below) with respect to the employees proposed to work in connection with the services request herein.*

E-verify is an example of a federal work authorization program. Acceptable enrollment and participation documentation consists of ***completed*** *copy of the E-Verify Memorandum of Understanding (MOU). For vendors that are not already enrolled and participating in a federal work authorization program. E-Verify is available at http://www.dhs.gov/xprevprot/programs/gc_1185221678150.shtm*

If it cannot be determined that a vendor is compliant with the above, it shall be the vendors responsibility to provide the documentation within a reasonable amount of time in relation to the needs within the bid.

Awarded Vendor may be required to fill out a Vendor Registration Form if vendor has not conducted business with the State of Missouri within the last two (2) years, in order to allow the Missouri Department of Transportation to pay invoice.

All bids (quotes) may be faxed back to (573) 526-6796 or dropped off at the District 5 office, no later March 24, 2009, 1:00 pm CDST. All quotes dropped off need to be marked **D5-09-033Q.**

*****All bidders will be responsible for checking the bidding website for any addendum to this bid.*****

VENDOR NAME:

VENDOR NOTES:

Missouri Department of Transportation purchase orders must be issued to the invoicing company/address. If the invoicing company/address will be different from that listed in the vendor information section (below), the vendor must specify the "remit to" company/address in the vendor notes section (above).

VENDOR INFORMATION

Vendor Name/Mailing Address:	Vendor Contact Information (including area codes): Phone #: Fax #: Cellular #:
Printed Name and Title of Responsible Officer or Employee:	Signature:

Is your company registered/certified with the State of Missouri as a (please circle):

MINORITY BUSINESS ENTERPRISE (MBE) ?	YES	NO
WOMEN BUSINESS ENTERPRISE (WBE) ?	YES	NO
Would your company like information on becoming a registered/certified MBE/WBE vendor?	YES	NO

All responses to this Request for Quote MUST be submitted on this form and all pages MUST be returned to the Buyer listed above at the District mailing address shown.

BID PRICING PAGE

Camdenton Maintenance Facility

Total Cost: $_____

Award will be made on Total Project Cost, Options pricing is not included.

Option Pricing

1) Per sheet price to replace plywood roof sheathing. $_____

SIGNATURE AND IDENTITY OF BIDDER

The undersigned states that the correct LEGAL NAME and ADDRESS of (1) the individual Bidder, (2) each partner or joint venture (whether individuals or corporations, and whether doing business under a fictitious name), or (3) the corporation (with the state in which it is incorporated) are shown below; that (if not signing with the intention of binding himself to become the responsible and sole contractor) he is the agent of, and duly authorized in writing to sign for the Bidder or Bidders; and that he is signing and executing this (as indicated in the proper spaces below) as the proposal of a

( ) sole individual ( ) partnership ( ) joint venture

( ) corporation, incorporated under laws of state of _____

Dated _____.

Name of individual, all partners,
or joint ventures: Address of each:

_____ _____

_____ _____

_____ _____

_____ _____

_____ _____

_____ _____

doing business under the name of:

Address of principal place of business in Missouri

_____ _____
(If using a fictitious name, show
this name above in addition
to legal names)

_____ _____
(If a corporation, show its name above)

ATTEST: (SEAL)

_____ _____
Secretary Title

(NOTE: If the Bidder is doing business under a FICTITIOUS NAME, the Proposal shall be executed in the legal name of the individual, partners, joint ventures, or corporation, with the legal address shown, and REGISTRATION OF FICTITIOUS NAME filed with the Secretary of
State, as required by Sections 417.200 to 417.230, RS Mo. If the Bidder is a CORPORATION NOT ORGANIZED UNDER THE LAWS OF MISSOURI, it shall procure a CERTIFICATE OF AUTHORITY TO DO BUSINESS IN MISSOURI, as required by Section 351.570 and following, RS Mo. A CERTIFIED COPY of such Registration of Fictitious Name or Certificate of Authority to do Business in Missouri shall be filed with the Missouri Highways and Transportation Commission, as required by the Standard specifications, Sec 102.6.6 and 102.6.7.

SUBCONTRACTOR LISTING

1. For portions of Work equaling or exceeding 1% of the total proposed Contract Sum, the undersigned proposes to use the following subcontractors. Except as otherwise approved by the Owner, the undersigned proposes to perform all other portions of the Work with his own forces.

2. Portion of the Work: Subcontractor name and address:

_____ _____

_____

_____

_____ _____

_____

_____

_____ _____

_____

_____

_____ _____

_____

_____

_____ _____

_____

_____

USE ADDITIONAL SHEETS IF REQUIRED

BIDDER:

_____

PROVIDE SIGNATURE IDENTICAL TO THAT SHOWN ON THE BID FORM

by_____

PREFERENCE IN PURCHASING PRODUCTS

DATE: _____

The bidders attention is directed to Section 34.076 RsMO 1986 which gives preference to Missouri corporations, firms, and individuals when letting contracts or purchasing products.

Bids/Quotations received will be evaluated on the basis of this legislation.

All vendors submitting a bid/quotation must furnish <u>ALL</u> information requested below.

FOR CORPORATIONS:

State in which incorporated: _____

FOR OTHERS:

State of domicile: _____

FOR ALL VENDORS:

List address of Missouri offices or places of business:

_____

_____

_____

_____

_____

_____

_____

THIS SECTION MUST BE COMPLETED AND SIGNED:

FIRM NAME: _____

ADDRESS: _____

CITY: _____ **STATE:** _____ **ZIP:** _____

BY (signature required): _____

Federal Tax I.D. #: _____ **if no Federal Tax I.D. # - list Social Security #:** _____

NOTE: For bid/quotation to be considered, the "Preference in Purchasing Products" form must be on file in the General Services (Procurement) Division and must be dated in the current calendar year.

CAMDENTON ROOF
D5-09-033Q

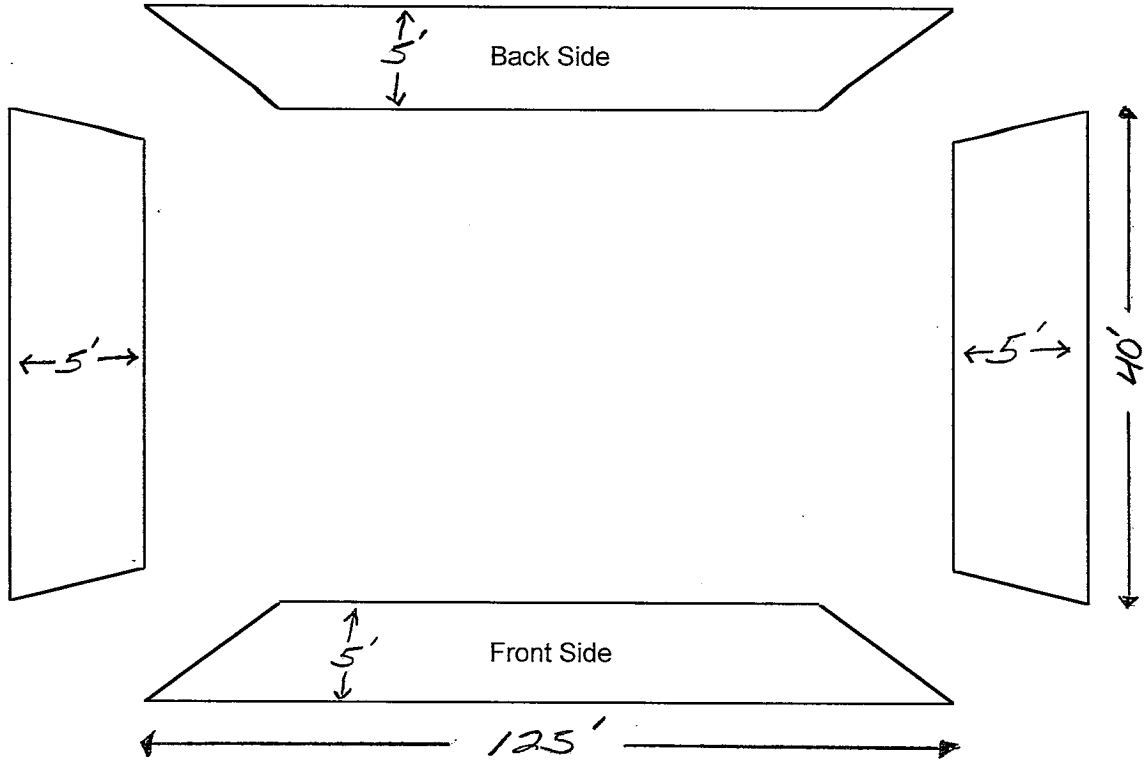

Approximately 1,600 Square Feet

STANDARD SOLICITATION PROVISIONS

a. The Missouri Department of Transportation (MoDOT) reserves the right to reject any or all bids/quotes/proposals, and to accept or reject any items thereon, and to waive technicalities. In case of error in the extension of prices in the bid/quote/proposal, unit prices will govern.

b. All bids/quotes/proposals must be signed with the firm name and by a responsible officer or employee. Obligations assumed by such signature must be fulfilled.

c. By virtue of statutory authority, a preference will be given to materials, products, supplies, provisions and all other articles produced, manufactured, made or grown, within the State of Missouri.

d. Time of delivery is a part of the consideration and, if not otherwise stated in the solicitation documents, must be stated in definite terms by the Bidder/Offeror and must be adhered to. If time varies on different items, the Bidder/Offeror shall so state.

e. If providing bids/quotes/proposals for commodities, the Bidder/Offeror will state brand or make on each item. If bidding or proposing other than the make, model or brand specified, the manufacturer's name, model number or catalog number must be given.

f. **For bids/proposals of $25,000** or more, no bids/proposals by telephone, telegram or telefax will be accepted.

g. The date specified for the returning of bids/quotes/proposals is a firm deadline and all bids/quotes/proposals must be received at the designated office by that time. The Department does not recognize the U.S. Mail, Railway Express Agency, Air Express, or any other organization, as its agent for purposes of accepting proposals. All proposals arriving at the designated office after the deadline specified will be rejected.

GENERAL TERMS AND CONDITIONS

General Performance

a. This work is to be performed under the general supervision and direction of the Missouri Department of Transportation (MoDOT) and, if awarded any portion of the work, the Contractor agrees to furnish at his own expense all labor and equipment required to complete the work, it being expressly understood that this solicitation is for completed work based upon the price(s) specified and is not a solicitation for rental of equipment or employment of labor by MoDOT, and MoDOT is to have no direction or control over the employees used by the Contractor in performance of the work.

Deliveries

a. Unless otherwise specified on the solicitation documents or purchase order, suppliers shall give at least 24 hours advance notice of each delivery. Delivery will only be received between the hours of 8:00 a.m. to 3:00 p.m., Monday through Friday. Material arriving after 3:00 p.m. will not be unloaded until the following workday. No material will be received on Saturday, Sunday or state holidays.

b. If the prices bid herein include the delivery cost of the material, the Contractor agrees to pay all transportation charges on the material as FOB - Destination. Freight costs must be included in the unit price bid and not listed as a separate line item.

c. Any demurrage is to be paid by the Contractor direct to the railroad or carrier.

Nondiscrimination

a. The Contractor shall comply with the Regulations relative to nondiscrimination in federally-assisted programs of the Department of Transportation, Title 49, Code of Federal Regulations, Part 21, as they may be amended from time to time, (hereinafter referred to as the Regulations), which are herein incorporated by reference and made a part of this contract.

b. All solicitations either by competitive bidding or negotiation made by the Contractor for work to be performed under a subcontract, including procurements of materials or leases of the Contractor's obligations under this contract and the Regulations, will be relative to nondiscrimination on the grounds of race, color, or national origin.

1) Sanctions for Noncompliance: In the event of the Contractor's noncompliance with the nondiscrimination provisions of this contract, MoDOT shall impose such contract sanctions as it or the Federal Highway Administration may determine to be appropriate, including, but not limited to:

i. withholding of payments to the Contractor under the contract until the Contractor complies, and/or,

ii. cancellation, termination or suspension of the contract, in whole or in part.

Contract/Purchase Order

a. By submitting a bid/quote/proposal, the Bidder/Offeror agrees to furnish any and all equipment, supplies and/or services specified in the solicitation documents, at the prices quoted, pursuant to all requirements and specifications contained therein.

b. A binding contract shall consist of: (1) the solicitation documents, amendments thereto, and/or Best and Final Offer (BAFO) request(s) with any changes/additions, (2) the Contractor's proposal and/or submitted pricing, and (3) the MHTC's acceptance of the proposal and/or bid by purchase order or post-award contract.

c. A notice of award does not constitute an authorization for shipment of equipment or supplies or a directive to proceed with services. Before providing equipment, supplies and/or services, the Contractor must receive a properly authorized purchase order and/or notice to proceed.

d. The contract expresses the complete agreement of the parties and performance shall be governed solely by the specifications and requirements contained therein. Any change, whether by modification and/or supplementation, must be accomplished by a formal contract amendment signed and approved by and between the duly authorized representative of the Contractor and the duly authorized representative of the MHTC, by a modified purchase order prior to the effective date of such modification. The Contractor expressly and explicitly understands and agrees that no other method and/or no other document, including correspondence, acts, and oral communications by or from any person, shall be used or construed as an amendment or modification.

Subcontracting

a. It is specifically understood that no portion of the material or any interest in the contract, shall be subcontracted, transferred, assigned or otherwise disposed of, except with the written consent of MoDOT. Request for permission to subcontract or otherwise dispose of any part of the work shall be in writing to MoDOT and accompanied by documentation showing that the organization which will perform the work is particularly experienced and

equipped for such work.

b. Consent to subcontract or otherwise dispose of any portion of the work shall not be construed to relieve the Contractor of any responsibility for the production and delivery of the contracted work and the completion of the work within the specified time.

c. All payments for work performed by a subcontractor shall be made to the Contractor to whom the contract was awarded and the purchase order issued.

Invoicing and Payment

a. MoDOT is exempt from paying Missouri Sales Tax, Missouri Use Tax and Federal Excise Tax. However, the Contractor may themselves be responsible for the payment of taxes on materials they purchase to fulfill the contract. A Project Tax Exemption Certificate will be furnished to the successful Bidder/Offeror upon request if applicable.

b. Each invoice should be itemized in accordance with items listed on the purchase order and/or contract. The statewide financial management system has been designed to capture certain receipt and payment information. Therefore, each invoice submitted must reference the purchase order number and must be itemized in accordance with items listed on the purchase order. Failure to comply with this requirement may delay processing of invoices for payment.

c. Unless otherwise provided for in the solicitation documents, payment for all equipment, supplies, and/or services required herein shall be made in arrears. The Missouri Highways and Transportation Commission (MHTC) shall not make any advance deposits.

d. The MHTC assumes no obligation for equipment, supplies, and/or services shipped or provided in excess of the quantity ordered. Any authorized quantity is subject to the MHTC's rejection and shall be returned at the Contractor's expense.

e. The MHTC reserves the right to purchase goods and services using the state-purchasing card.

Applicable Laws and Regulations

a. The contract shall be construed according to the laws of the State of Missouri. The Contractor shall comply with all local, state, and federal laws and regulations related to the performance of the contract.

b. The Contractor must be registered and maintain good standing with the Secretary of State of the State of Missouri and other regulatory agencies, as may be required by law or regulations. Prior to the issuance of a purchase order and/or notice to proceed, the Contractor may be required to submit to MoDOT a copy of their current Authority Certificate from the Secretary of State of the State of Missouri.

1) Prior to the issuance of a purchase order and/or notice to proceed, all **out-of-state** Contractors **providing services** within the state of Missouri must submit to MoDOT a copy of their current Transient Employer Certificate from the Department of Revenue, in addition to a copy of their current Authority Certificate from the Secretary of State of the State of Missouri.

c. The exclusive venue for any legal proceeding relating to or arising, out of the contract shall be in the Circuit Court of Cole County, Missouri.

d. Pursuant to RSMo 285.530 (1), no business entity or employer shall knowingly employ, hire for employment, or continue to employ an unauthorized alien to perform work within the state of Missouri. As a condition for the award of any contract or grant in excess of five thousand dollars by the state or by any political subdivision of the state to a business entity, or for any business entity receiving a state-administered or subsidized tax credit, tax abatement, or loan from the state, the business entity shall, by sworn affidavit and provision of documentation, affirm its enrollment and participation in a federal work authorization program with respect to the employees working in connection with the contracted services. Every such business entity shall sign an affidavit affirming that it does not knowingly employ any person who is unauthorized alien in connection with the contracted services. [RSMO 285.530 (2)] A copy of the affidavit referenced above is provided within this document.

Executive Order

a. The Contractor shall comply with all the provisions of Executive Order 07-13, issued by the Honorable Matt Blunt, Governor of Missouri, on the sixth (6th) day of March, 2007. This Executive Order, which promulgates the State of Missouri's position to not tolerate persons who contract with the state engaging in or supporting illegal activities of employing individuals who are not eligible to work in the United States, is incorporated herein by reference and made a part of this Agreement.

1) "By signing this Agreement, the Contractor hereby certifies that any employee of the Contractor assigned to perform services under the contract is eligible and authorized to work in the United States in compliance with federal law."

2) In the event the Contractor fails to comply with the provisions of the Executive Order 07-13, or in the event the Commission has reasonable cause to believe that the contractor has knowingly employed individuals who are not eligible to work in the United States in violation of federal law, the Commission reserves the right to impose such contract sanctions as it may determine to be appropriate, including but not limited to contract cancellation, termination or suspension in whole or in part or both.

3) The Contractor shall include the provisions of this paragraph in every subcontract. The Contractor shall take such action with respect to any subcontract as the Commission may direct as a means of enforcing such provisions, including sanctions for noncompliance.

Preferences

a. In the evaluation of bids/quotes/proposals, preferences shall be applied in accordance with Chapter 34 RSMo. Contractors should apply the same preferences in selecting subcontractors.

b. By virtue of statutory authority, RSMo. 34.076 and 34.350 to 34.359, a preference will be given to materials, products, supplies, provisions and all other articles produced, manufactured, made or grown within the State of Missouri. Such preference shall be given when quality is equal or better and delivered price is the same or less.

1) If attached, the document entitled **"PREFERENCE IN PURCHASING PRODUCTS"** should be completed and returned with the solicitation documents.

2) If attached, the document entitled **"MISSOURI DOMESTIC PRODUCTS PROCUREMENT ACT"** should be completed and returned with the solicitation documents**. Applies if bid is Twenty-Five Thousand Dollars ($25,000.00) or more.**

c. By virtue of statutory authority, RSMo 34.074, a preference will be given all contracts for the performance of any job or service to service-disabled veteran business either doing business as Missouri firms, corporations, or individuals; or which maintain Missouri offices or places of business, when the quality of performance promised is equal or better and the price quoted is the same or less or whenever competing bids, in their entirety, are comparable.

1) If attached, the document entitled **"MISSOURI SERVICE-DISABLED VETERAN PREFERENCE"** should be completed and returned with the solicitation documents.

d. In the event of a tie of low bids, the MHTC reserves the right to establish the method to be used in determining the award

Remedies and Rights

a. No provision in the contract shall be construed, expressly or implied, as a waiver by the MHTC of any existing or future right and/or remedy available by law in the event of any claim by the MHTC of the Contractor's default or breach of contract.

b. The Contractor agrees and understands that the contract shall constitute an assignment by the Contractor to the MHTC of all rights, title and interest in and to all causes of action that the Contractor may have under the antitrust laws of the United States or State of Missouri for which causes of action have accrued or will accrue as the result of or in relation to the particular equipment, supplies, and/or services purchased or produced by the Contractor in the fulfillment of the contract with the MHTC.

c. In the event a Contractor becomes involved in, or is threatened with, litigation with a subcontractor or supplier as a result of such direction, the Contractor may request MoDOT to enter into such litigation to protect the interests of the MHTC, and, in addition, the Contractor may request the United States to enter into such litigation to protect the interests of the United States.

Cancellation of Contract

a. The MHTC may cancel the contract at any time for a material breach of contractual obligations or for convenience by providing the Contractor with written notice of cancellation. Should the MHTC exercise its right to cancel the contract for such reasons, cancellation will become effective upon the date specified in the notice of cancellation sent to the Contractor.

b. If the MHTC cancels the contract for breach, the MHTC reserves the right to obtain the equipment, supplies, and/or services to be provided pursuant to the contract from other sources and upon such terms and in such manner as the MHTC deems appropriate and charge the Contractor for any additional costs incurred thereby.

Bankruptcy or Insolvency

a. Upon filing for any bankruptcy or insolvency proceeding by or against the Contractor, whether voluntary or involuntary, or upon the appointment of a receiver, trustee, or assigned the benefit or creditors, the Contractor must notify MoDOT immediately. Upon learning of any such actions, the MHTC reserves the right, at its sole discretion, to either cancel the contract or affirm the contract and hold the Contractor responsible for damages.

Inventions, Patents, and Copyrights

a. The Contractor shall defend, protect, and hold harmless the MHTC, its officers, agents, and employees against all suits of law or in equity resulting from patent and copyright infringement concerning the Contractor's performance or products produced under the terms of the contract.

Inspection and Acceptance

a. No equipment, supplies, and/or services received by MoDOT pursuant to a contract shall be deemed accepted until MoDOT has had reasonable opportunity to inspect said equipment, supplies, and/or services.

b. All equipment, supplies, and/or services which do not comply with the specifications and/or requirements or which are otherwise unacceptable or defective may be rejected. In addition, all equipment, supplies, and/or services which are discovered to be defective or which do not conform to any warranty of the Contractor upon inspection (or at any later time if the defects contained were not reasonably ascertainable upon the initial inspection) may be rejected.

c. The MHTC reserves the right to return any such rejected shipment at the Contractor's expense for full credit or replacement and to specify a reasonable date by which replacements must be received.

d. The MHTC's right to reject any unacceptable equipment, supplies, and/or services shall not exclude any other legal, equitable or contractual remedies the MHTC may have.

Warranty

a. The Contractor expressly warrants that all equipment, supplies, and/or services provided shall: (1) conform to each and every specification, drawing, sample or other description which was furnished to or adopted by MoDOT, (2) be fit and sufficient for the purpose expressed in the solicitation documents, (3) be merchantable, (4) be of good materials and workmanship, and (5) be free from defect.

b. Such warranty shall survive delivery and shall not be deemed waived either by reason of the MHTC's acceptance of or payment for said equipment, supplies, and/or services.

Status of Independent Contractor

a. The Contractor represents itself to be an independent Contractor offering such services to the general public and shall not represent itself or its employees to be an employee of the MHTC. Therefore, the Contractor shall assume all legal and financial responsibility for taxes, FICA, employee fringe benefits, workers' compensation, employee insurance, minimum wage requirements, overtime, etc., and agrees to indemnify, save and hold the MHTC, its officers, agents and employees harmless from and against any and all losses (including attorney fees) and damage of any kind related to such matters.

Indemnification

a. The Offeror shall defend, indemnify and hold harmless the Commission, including its members and department employees, from any claim or liability whether based on a claim for damages to real or personal property or to a person for any matter relating to or arising out of the Offeror's performance of its obligations under this Agreement.

SPECIAL TERMS AND CONDITIONS

Insurance

(1) Prior to contract signing, the Offeror may be asked about its ability to provide certificates of insurance which meet, or approach, the following coverages:

a. General Liability	Not less than $500,000 for any one person in a single accident or occurrence, and not less than $3,000,000 for all claims arising out of a single occurrence;
b. Automobile Liability	Not less than $500,000 for any one person in a single accident or occurrence, and not less than $3,000,000 for all claims arising out of a single occurrence;

c. Missouri State Workmen's Compensation policy or equivalent in accordance with state law.

Required Specifications

a. All materials, equipment, and/or services bid upon must comply with the attached MoDOT Specifications and any other provisions outlined in the solicitation documents.

Information and Reports

a. The Contractor shall provide all information and reports required by the Regulations, or Directives issued pursuant thereto, and shall permit access to its books, records, accounts, other sources of information, and its facilities as may be determined by the Missouri Department of Transportation or the Federal Highway Administration to be pertinent to ascertain compliance with such Regulations or Directives. Where any information required of a Contractor is in the exclusive possession of another who fails or refuses to furnish this information the Contractor shall so certify to the Missouri Department of Transportation, or the Federal Highway Administration as appropriate, and shall set forth what efforts it has made to obtain the information.

Prevailing Wage

a. If the bid/quote/proposal is accepted, the vendor will be required to comply with the prevailing wages as fixed by the Missouri Department of Labor and Industrial Relations, in effect as of the date of the issuance of the solicitation, for each affected craft and type of workmen in the following county(ies): **CAMDEN**. The **Annual Wage Order # 15** may be inspected at any District Office or at the Central Office in Jefferson City, MO.

b. The Contractor shall submit notarized weekly payroll affidavit documentation included with the project request for payment. The successful vendor must provide a lien waiver from all material suppliers.

Permits, Licenses and Safety Issues

a. The contract price shall include any necessary permits and licenses required by law incidental to the work. Local ordinances requiring building permits are not applicable to state agencies.

b. The Contractor will comply with local laws involving safety in the prosecution of the work.

Award

a. Award of this bid/quote/proposal will be made on an "All Or Nothing" basis using the "lowest and best" principle of award.

Notice to Proceed

a. Within **30 days** after the execution of the contract, a **"Notice to Proceed"** will be issued by the Department. A purchase order will be attached to the "Notice to Proceed," which will specify the date or dates that the Contractor can start delivery, roadway or stockpile delivery and will also include the completion dates. These dates will be in accordance with the dates shown in the proposal.

Delivery – Additional Requirements

a. The Contractor shall furnish the Missouri Department of Transportation with a planned delivery schedule at least 16 hours before starting delivery.

   1) Notification should be during the normal workday preceding the day on which the Contractor desires to initiate delivery.

   2) It will be necessary for a representative of the Missouri Department of Transportation to be present when the material is delivered.

   3) No material will be accepted that has been dumped in the absence of the department's aggregate materials checker.

b. Unless otherwise specified in the proposal, deliveries will be a minimum of **500 Tons Per Day**. No deliveries will be made during the period from **30 minutes before sundown to sunrise.** No deliveries will be made on **Saturdays, Sundays and holidays** unless specifically authorized by the engineer.

c. The following days shall be construed as **official holidays** under the terms of the contract:

January l	New Year's Day
Third Monday in January	Martin Luther King, Jr.'s Birthday
February 12	Lincoln's Birthday
Third Monday in February	Washington's Birthday
May 8	Truman's Birthday
Last Monday in May	Memorial Day
July 4	Independence Day
First Monday in September	Labor Day
Second Monday in October	Columbus Day
November 11	Veteran's Day
Fourth Thursday in November	Thanksgiving Day
December 25	Christmas Day

d. When any of the above **holidays falls** on a **Sunday,** the holiday will be observed on the following **Monday**; when any of the above **holidays falls** on a **Saturday**, the **holiday** will be observed on the immediately preceding **Friday.**

e. Contractor will not be required to provide dozers, loaders, motor graders, or other equipment for shaping of stockpiles, constructing ramps or runways, or leveling of the top of a completed lift, unless otherwise noted herein.

Temporary Suspension of Work

a. The **District Engineer** shall have authority to suspend work wholly or in part for such period or periods as may be deemed necessary when weather or other conditions are such that in the opinion of the engineer, the work may be done at a later time with advantage to the Department or for failure on the part of the Contractor to comply with any of the provisions of the Contract.

b. If the Department suspends the work for its own advantages and not because of the Contractor's failure to comply with the Contract, the Contractor will be allowed an equal number of calendar days after the completion date for the completion of the work. The Department may at its discretion give the Contractor an extension of time for completing the work where the Contractor incurs delays for causes beyond his control.

c. Normal rainfall is not considered a cause qualifying for an extension of time. Claim for extension of time for all causes must be submitted by the Contractor in writing within **30 Days** after the claimed cause for the delay has ceased to exist.

Cancellation of Contract

a. If the Contractor/supplier fails to carry out the performance of the work with sufficient workmen and equipment to insure the completion of the delivery within the time specified or becomes insolvent or is adjudicated a bankrupt or commits any act of bankruptcy or insolvency or allows any final judgment to stand against him for a period of ten (10) days, the Missouri Department of Transportation may give notice in writing by registered mail to the Contractor/supplier and the surety of such delay, neglect or default.

b. If, within ten (10) days after such notice the Contractor/supplier does not proceed to remedy to the satisfaction of the Department's representatives the faults specified in said notice, or the surety does not proceed to take over the deliveries, the Department shall have full power and authority, without impairing the obligation of the Contractor/supplier under the contract or the surety under the bond, to take over the completion of the work and arrange for the shipment of any materials necessary to complete the work and the Contractor/supplier and the surety will be responsible for any additional costs incurred by the Department in obtaining the completion of the deliveries.

Liquidated Damages

a. In the event the successful Contractor fails to deliver the material within the time specified, the Department and the public will sustain damages because of such delay in delivery, the exact extent of which would be difficult to ascertain, and in order to liquidate such damage in advance it is agreed that the **sum of one-hundred dollars ($100.00) per day, per item,** for each assessable calendar day on which the delivery has not been completed, is reasonable and the best estimate which the parties can arrive at as liquidated damages, and it is therefore agreed that said amount will be withheld from payments due the Contractor or otherwise collected from the Contractor as liquidated damages.

b. **Saturdays, Sundays, holidays and days whereas the Department has suspended work** shall not be assessable days.

Environmental Issues

b. Attention of the bidder is invited to the **Land Reclamation Act, Chapter 444, Laws of 1971, (House Bill 519)** and the necessity for compliance if applicable.

c. The Contractor shall take necessary precautions and shall schedule and conduct his operations so as to avoid or minimize siltation of streams while removing gravel there from.

MISSOURI SERVICE-DISABLED VETERAN BUSINESS PREFERENCE

By virtue of statutory authority, RSMo 34.074, a preference will be given all contracts for the performance of any job or service to service-disabled veteran business either doing business as Missouri firms, corporations, or individuals; or which maintain Missouri offices or places of business, when the quality of performance promised is equal or better and the price quoted is the same or less or whenever competing bids, in their entirety, are comparable.

Definitions:

Service-Disabled Veteran is defined as any individual who is disabled as certified by the appropriate federal agency responsible for the administration of veterans' affairs.

Service-Disabled Veteran Business is defined as a business concern:

a. Not less than fifty-one (51) percent of which is owned by one or more service-disabled veterans or, in the case of any publicly owned business, not less than fifty-one (51) percent of the stock of which is owned by one or more service-disabled veterans; and
b. The management and daily business operations of which are controlled by one or more service-disabled veterans.

If an offeror meets the definitions of a service-disabled veteran and a service-disabled veteran business as defined in 34.074 RSMo and is either doing business as a Missouri firm, corporation, or individual; or maintains a Missouri office or place of business, the offeror **must** provide the following with the proposal in order to receive the Missouri service-disabled veteran business preference over a non-Missouri service-disabled veteran business when the quality of performance promised is equal or better and the price quoted is the same or less or whenever competing proposals, in their entirety, are comparable:

a. A copy of a letter from the Department of Veterans Affairs (VA), or a copy of the offeror's discharge paper (DD Form 214, Certificate of Release or Discharge from Active Duty) from the branch of service the offeror was in, stating that the offeror has a service-connected disability rating ranging from 0 to 100% disability; and
b. A completed copy of this exhibit

(NOTE: For ease of evaluation, please attach copy of the above-referenced letter from the VA or a copy of the offeror's discharge paper to this Exhibit.)

By signing below, I certify that I meet the definitions of a service-disabled veteran and a service-disabled veteran business as defined in 34.074 RSMo and that I am either doing business as a Missouri firm, corporation, or individual; or maintain Missouri offices or places of business at the location(s) listed below.

Veteran Information	Business Information
Service-Disabled Veteran's Name, (Please Print)	Service-Disabled Veteran Business Name
Service-Disabled Veteran's Signature	Missouri Address of Service-Disabled Veteran Business

ANTI-COLLUSION STATEMENT

STATE OF _____)
) SS.
COUNTY OF _____)

_____

_____ being first

duly sworn, deposes and says that he is _____
Title of Person Signing

of _____

_____
Name of Bidder

that all statements made and facts set out in the proposal for the above project are true and correct; and that the bidder (The person, firm, association, or corporation making said bid) has not, either directly or indirectly, entered into any agreement, participated in any collusion, or otherwise taken any action in restraint of free competitive bidding in connection with such bid or any contract which may result from its acceptance.

Affiant further certifies that bidder is not financially interested in, or financially affiliated with, any other bidder for the above project.

By _____

By _____

By _____

Sworn to before me this _____ day of _____, 20___.

_____
Notary Public

My Commission Expires _____

Missouri
Division of Labor Standards

WAGE AND HOUR SECTION

MATT BLUNT, Governor

Annual Wage Order No. 15

Section 015

CAMDEN COUNTY

In accordance with Section 290.262 RSMo 2000, within thirty (30) days after a certified copy of this Annual Wage Order has been filed with the Secretary of State as indicated below, any person who may be affected by this Annual Wage Order may object by filing an objection in triplicate with the Labor and Industrial Relations Commission, P.O. Box 599, Jefferson City, MO 65102-0599. Such objections must set forth in writing the specific grounds of objection. Each objection shall certify that a copy has been furnished to the Division of Labor Standards, P.O. Box 449, Jefferson City, MO 65102-0449 pursuant to 8 CSR 20-5.010(1). A certified copy of the Annual Wage Order has been filed with the Secretary of State of Missouri.

Original Signed by
Paul Buckley, Director
Division of Labor Standards

This Is A True And Accurate Copy Which Was Filed With The Secretary of State: **March 10, 2008**

Last Date Objections May Be Filed: **April 9, 2008**

Prepared by Missouri Department of Labor and Industrial Relations

OCCUPATIONAL TITLE	**Effective Date of Increase	*	Basic Hourly Rates	Over-Time Schedule	Holiday Schedule	Total Fringe Benefits
Asbestos Worker			$21.31	56	28	$9.07
Boilermaker	1/09		$32.10	57	7	$19.85
Bricklayers - Stone Mason			$26.98	59	7	$11.20
Carpenter	4/08		$28.65	63	68	$12.03
Cement Mason			$22.34	9	3	$10.09
Electrician (Inside Wireman)			$28.18	28	7	$10.96 + 13%
Communication Technician			USE ELECTRICIAN (INSIDE WIREMAN) RATE			
Elevator Constructor		a	$35.855	26	54	$16.055
Operating Engineer						
Group I			$21.88	84	4	$10.30
Group II			***$20.37	84	4	$10.30
Group III			$19.72	84	4	$10.30
Group III-A			$20.37	84	4	$10.30
Group IV						
Group V			$13.13	84	4	$10.30
Pipe Fitter			$18.00	FED		$3.11
Glazier			$29.48	87	31	$16.13 + 13.2%
Laborer (Building):						
General	4/08		$18.33	111	4	$8.40
First Semi-Skilled	4/08		$19.83	111	4	$8.40
Second Semi-Skilled	4/08		$19.83	111	4	$8.40
Lather			USE CARPENTER RATE			
Linoleum Layer & Cutter	4/08		$23.03	123	78	$9.45
Marble Mason	6/08		$30.49	25	4	$11.60
Millwright	4/08		$33.00	63	68	$12.03
Iron Worker			$23.75	50	4	$20.35
Painter	7/08		$22.30	105	16	$10.11
Plasterer			$26.70	67	3	$12.06
Plumber			$22.50	FED		$3.49
Pile Driver	4/08		$33.00	63	68	$12.03
Roofer	9/08		$26.50	12	4	$11.29
Sheet Metal Worker	7/08		$34.69	17	22	$14.94
Sprinkler Fitter			$16.50	FED		$2.60
Terrazzo Worker	6/08		$30.49	25	4	$11.60
Tile Setter	6/08		$30.49	25	4	$11.60
Truck Driver - Teamster						
Group I			$15.05	98	4	$4.625
Group II						
Group III			$15.10	98	4	$4.625
Group IV			$15.20	98	4	$4.625
Traffic Control Service Driver			$16.35	48	49	$2.75
Welders - Acetylene & Electric		*				

Fringe Benefit Percentage is of the Basic Hourly Rate

Attention Workers: If you are not being paid the appropriate wage rate and fringe benefits contact the Division of Labor Standards at (573) 751-3403.

*** Due to a clerical error, the rate for Operating Engineer Group II issued in Annual Wage Order No. 15 was incorrect. The Basic Hourly Rate should have been $20.37.

**Annual Incremental Increase

OCCUPATIONAL TITLE	*Effective Date of Increase	Basic Hourly Rates	Over-Time Schedule	Holiday Schedule	Total Fringe Benefits

* Welders receive rate prescribed for the occupational title performing operation to which welding is incidental.

Use Building Construction Rates on Building(s) and All Immediate Attachments. Use Heavy Construction rates for remainder of project. For the occupational titles not listed in Heavy Construction Sheets, use Rates shown on Building Construction Rate Sheet.

a - Vacation: Employees over 5 years - 8%; Employees under 5 years - 6%

CAMDEN COUNTY
OVERTIME SCHEDULE - BUILDING CONSTRUCTION

FED: Minimum requirement per Fair Labor Standards Act means time and one-half (1 ½) shall be paid for all work in excess of forty (40) hours per work week.

NO. 9: Means the regular workday starting time of 8:00 a.m. (and resulting quitting time of 4:30 p.m.) may be moved forward to 6:00 a.m. or delayed one hour to 9:00 a.m. All work performed in excess of the regular work day and on Saturday shall be compensated at one and one-half (1½) times the regular pay. In the event time is lost during the work week due to weather conditions, the Employer may schedule work on the following Saturday at straight time. All work accomplished on Sunday and holidays shall be compensated for at double the regular rate of wages. The work week shall be Monday through Friday, except for midweek holidays.

NO. 12: Means the work week shall commence on Monday at 12:01 a.m. and shall continue through the following Friday, inclusive of each week. All work performed by employees anywhere in excess of forty (40) hours in one (1) work week, shall be paid for at the rate of one and one-half (1½) times the regular hourly wage scale. All work performed within the regular working hours which shall consist of a ten (10) hour work day except in emergency situations. Overtime work and Saturday work shall be paid at one and one-half (1½) times the regular hourly rate. Work on recognized holidays and Sundays shall be paid at two (2) times the regular hourly rate.

NO. 17: Means the regular working day shall consist of eight (8) hours of labor between 7:00 a.m. and 3:30 p.m. and the regular work week shall consist of five (5) consecutive eight (8) hour days of labor beginning on Monday and ending with Friday of each week. All full-time or part-time labor performed during such hours shall be recognized as regular working hours and paid for at the regular hourly rate. Except as otherwise provided, all work performed outside of regular working hours during the regular work week, shall be at double (2) times the regular rate. Working hours may be varied by two (2) hours. When circumstances warrant and when it is mutually beneficial and agreed to by interested parties, the Employer may institute a work week consisting of four (4) consecutive ten (10) hour days, between the hours of five (5) a.m. and six (6) p.m., Monday through Thursday, with one-half (1/2) hour allowed for a lunch period each day. Friday may be used as a make-up day. The make-up day will be voluntary, and a decision not to work may not be held against the employee. When working four (4) ten (10) hour days overtime will be paid at the time and one-half (1½) rate for the eleventh (11th) and twelfth (12th) hour, all other work will be paid at the double (2) time rate of pay. The first two (2) hours of overtime, Monday through Friday, and the first eight (8) hours on Saturday shall be at time and one-half (1½) for all work. All other overtime shall be at double (2) time. The first two (2) hours of overtime must be concurrent with the regular work day, two (2) hours prior to or following the regular work day are at time and one-half (1½). The regular workday (as previously defined) on Saturday is paid at time and one-half (1½). Work performed outside of the regular Saturday work day is at double (2) time. All work performed on recognized holidays, or days locally observed as such, and Sundays shall be paid at the double (2) time rate of pay.

NO. 25: Means regular working hours of eight (8) hours shall constitute a working day between the hours of 8:00 a.m. to 4:30 p.m. in a forty (40) hour working week of Monday through Friday. Employment on Saturday, Sunday and legal holidays, and employment before or after the regular working hours shall be considered overtime. Employment on Saturday, Sunday and legal holidays shall be paid for at twice (2) the regular hourly rate. Employment from 4:30 p.m. to 12:00 midnight, Monday through Friday, shall be paid for at one and one-half (1½) times the regular hourly rate. From 12:00 midnight until 8:00 a.m. on any day shall be paid for at twice (2) the regular hourly rate.

NO. 26: Means that the regular working day shall consist of eight (8) hours worked between 6:00 a.m., and 5:00 p.m., five (5) days per week, Monday to Friday, inclusive. Hours of work at each jobsite shall be those established by the general contractor and worked by the majority of trades. (The above working hours may be changed by mutual agreement). Work performed on Construction Work on Saturdays, Sundays and before and after the regular working day on Monday to Friday, inclusive, shall be classified as overtime, and paid for at double (2) the rate of single time. The employer may establish hours worked on a jobsite for a four (4) ten (10) hour day work week at straight time pay for construction work; the regular working day shall consist of ten (10) hours worked consecutively, between 6:00 a.m. and 6:00 p.m., four (4) days per week, Monday to Thursday, inclusive. Any work performed on Friday, Saturday, Sunday and holidays, and before and after the regular working day on Monday to Thursday where a four (4) ten (10) hour day workweek has been established, will be paid at two times (2) the single time rate of pay. The rate of pay for all work performed on holidays shall be at two times (2) the single time rate of pay.

CAMDEN COUNTY
OVERTIME SCHEDULE - BUILDING CONSTRUCTION

NO. 28: Means a regular workday shall consist of eight (8) hours between 7:00 a.m. and 5:30 p.m., with at least a thirty (30) minute period to be taken for lunch. Five (5) days a week, Monday through Friday inclusive, shall constitute a work week. The Employer has the option for a workday/workweek of four (4) ten (10) hour days (4-10's) provided:

-The project must be for a minimum of four (4) consecutive days.
-Starting time may be within one (1) hour either side of 8:00 a.m.
-Work week must begin on either a Monday or Tuesday: If a holiday falls within that week it shall be a consecutive work day. (Alternate: If a holiday falls in the middle of a week, then the regular eight (8) hour schedule may be implemented).
-Any time worked in excess of any ten (10) hour work day (in a 4-10 hour work week) shall be at the appropriate overtime rate.

All work outside of the regular working hours as provided, Monday through Saturday, shall be paid at one & one-half (1½) times the employee's regular rate of pay. All work performed from 12:00 a.m. Sunday through 8:00 a.m. Monday and recognized holidays shall be paid at double (2) the straight time hourly rate of pay. Should employees work in excess of twelve (12) consecutive hours they shall be paid double time (2X) for all time after twelve (12) hours. Shift work performed between the hours of 4:30 p.m. and 12:30 a.m. (second shift) shall receive eight (8) hours pay at the regular hourly rate of pay plus ten (10%) percent for seven and one-half (7½) hours work. Shift work performed between the hours of 12:30 a.m. and 8:00 a.m. (third shift) shall receive eight (8) hours pay at the regular hourly rate of pay plus fifteen (15%) percent for seven (7) hours work. A lunch period of thirty (30) minutes shall be allowed on each shift. All overtime work required after the completion of a regular shift shall be paid at one and one-half (1½) times the shift hourly rate.

NO. 48: Means the regularly scheduled work week shall be five (5) consecutive days, Monday through Friday or Tuesday through Saturday. Eight (8) hours shall constitute a day's work. Starting time shall not be earlier than 7:00 a.m. nor later than 10:00 a.m. Forty (40) hours shall constitute a week's work. Overtime at the rate of time and one-half (1½) will be paid for all work in excess of forty (40) hours in any one work week. On the Monday through Friday schedule, all work performed on Saturday will be time and one-half (1½) unless time has been lost during the week, in which case Saturday will be a make up day to the extent of the lost time. On the Tuesday through Saturday schedule, all work performed on Monday will be time and one-half (1½) unless time has been lost during the week, in which case Monday will be a make-up day to the extent of the lost time. Any work performed on Sunday will be double (2) time. If employees work on any of the recognized holidays, they shall be paid time and one-half (1½) their regular rate of pay for all hours worked.

NO. 50: Means eight (8) hours constitute a normal day's work Monday through Friday. Any time worked over eight (8) hours will normally be paid at time and one-half (1½) except for exclusions stated in some following additional sentences. The Employer, at his discretion, may start the work day between 6:00 a.m. and 9:00 a.m. Any schedule chosen shall be started at the beginning of the work week (Monday) and used for at least five days. Work may be scheduled on a four (4) days a week (Monday through Thursday) at ten (10) hours a day schedule. If such a schedule is employed, then Friday may be used as a make-up day when time is lost due to inclement weather. Time and one-half (1½) shall be paid for any work in excess of eight (8) hours in any regular work day Monday through Friday unless working 4-10's, then time and one-half (1½) after ten (10) hours. All work performed on Saturday will be time and one-half (1½). Double (2) time shall be paid for all work on Sundays and recognized holidays.

NO 56: Means the regular work day shall consist of eight (8) hours between 8:00 a.m. and 4:30 p.m. of a regular forty (40) hour work week of Monday through Friday. An optional four day work week may be utilized with the ten (10) hour clause, days Monday through Thursday or Tuesday through Friday. Work hours shall be from 7:00 a.m. to 5:30 p.m. Work performed outside of the regular work day, and on Saturdays, Sundays and holidays shall be paid at double (2) time the regular rate of pay.

NO. 57: Means eight (8) hours per day shall constitute a day's work and forty (40) hours per week, Monday through Friday, shall constitute a week's work. The regular starting time shall be 8:00 a.m. The above may be changed by mutual consent of authorized personnel. When circumstances warrant, the Employer may change the regular workweek to four (4) ten-hour days at the regular time rate of pay. It being understood that all other pertinent information must be adjusted accordingly. All time worked before and after the established workday of eight (8) hours, Monday through Friday, all time worked on Saturday, shall be paid at the rate of time and one-half (1½) except in cases where work is part of an employee's regular Friday shift. All time worked on Sunday and recognized holidays shall be paid at the double (2) time rate of pay.

NO. 59: Means that except as herein provided, eight (8) hours a day shall constitute a standard work day, and forty (40) hours per week shall constitute a week's work. All time worked outside of the standard eight (8) hour work day and on Saturday shall be classified as overtime and paid the rate of time and one-half (1½). All time worked on Sunday and holidays shall be classified as overtime and paid at the rate of double (2) time. The Employer has the option of working either five (5) eight hour days or four (4) ten hour days to constitute a normal forty (40) hour work week. When the four (4) ten-hour work week is in effect, the standard work day shall be consecutive ten (10) hour periods between the hours of 6:30 a.m. and 6:30 p.m. Forty (40) hours per week shall constitute a weeks work, Monday through Thursday, inclusive. In the event the job is down for any reason beyond the Employer's control, then Friday and/or Saturday may, at the option of the Employer, be worked as a make-up day; straight time not to exceed ten (10) hours or forty (40) hours per week. When the five day (8) hour work week is in effect, forty (40) hours per week shall constitute a week's work, Monday through Friday, inclusive. In the event the job is down for any reason beyond the Employer's control, then Saturday may, at the option of the Employer, be worked as a make-up day; straight time not to exceed eight (8) hours or forty (40) hours per week. The regular starting time (and resulting quitting time) may be moved to 6:00 a.m. or delayed to 9:00 a.m. Make-up days shall not be utilized for days lost due to holidays.

NO. 63: Means eight (8) hours shall constitute the regular work day between time that may be advanced or delayed by two (2) hours on either side of 8:00 AM. The Employer may establish a work week consisting of four (4) days, Monday through Thursday, each day consisting of ten (10) hours straight time. The four (4) tens (10s) must run for a period of at least four (4) days, Monday through Thursday. All work on Friday on a four (4) tens (10) project will be paid at the rate of time and one-half (1½). All work performed on Saturday shall be paid at time and one-half (1½). All work performed on Sundays and recognized holidays must be paid at double (2) time. All work performed prior to or after the regular eight (8) hour work day, or ten (10) hour work day, as described above shall be paid at time and one-half (1½) the regular rate.

NO. 67: Means eight (8) hours shall constitute a day's work, with a flexible starting time to begin between 6:00 a.m. to 8:00 a.m., five (5) days a week, Monday through Friday. Any work over eight (8) hours in any one day shall be at the overtime rate, which is time & one-half (1½). Any work on Saturday shall be at time & one-half (1½), unless a Make-Up Day due to inclement weather is in effect. Any work on Sundays or holidays shall be at double (2) time. Four (4) days, ten (10) hours each day to be worked during Monday through Friday, shall be paid at straight time. A Make-Up Day Due To Inclement Weather Only - Employee(s) will be permitted to work an eight (8) hour make-up day on Saturday only, and the employee will receive the regular straight time wage rate. To be eligible for this eight (8) hour make-up day, the employee cannot have worked over thirty-two (32) hours for that particular workweek Monday through Friday. Any hours less than eight (8) hours may not be made up under this provision.

NO. 84: The regular working starting time of 8:00 a.m. (and resulting quitting time of 4:30 p.m.) may be moved forward to 6:00 a.m. or delayed one (1) hour to 9:00 a.m. Except as provided in this Article, eight (8) hours a day shall constitute a standard work day and forty (40) hours per week shall constitute a weeks' work, which shall begin on Sunday and end on Saturday. All time worked outside of the standard work day and on Saturday shall be classified as overtime and paid at the rate of time & one-half (1½) (except as herein provided). All time worked on Sunday and recognized holidays shall be classified as overtime and paid at the rate of double (2) time. The Employer has the option of working either five (5) eight-hour days or four (4) ten-hour days to constitute a normal forty (40) hour work week. When the four (4) ten-hour work week is in effect, the standard work day shall be consecutive ten (10) hour periods, exclusive of the lunch period, beginning at 6:30 a.m. and forty (40) hours per week shall constitute a week's work, Monday through Thursday, inclusive. In the event the job is down for any reason beyond the Employer's control, then Friday and/or Saturday may, at the option of the Employer, be worked as a make-up day, straight time not to exceed ten (10) hours or forty (40) hours per week. When the five (5) eight-hour work week is in effect, forty (40) hours per week shall constitute a week's work, Monday through Friday, inclusive. In the event the job is down for any reason beyond the Employer's control, then Saturday may, at the option of the Employer, be worked as a make-up day, straight time not to exceed eight (8) hours or forty (40) hours per week.

NO. 87: Means eight (8) hours starting between 6:00 a.m. and 8:00 a.m. and ending between 2:30 p.m. and 4:30 p.m. at the Employers discretion shall constitute a day's work. Any work prior to 6:00 a.m. or after eight (8) hours shall be paid at the overtime rate. Five (5) days from Monday through Friday inclusive shall constitute a regular work week. All hours before and after these regular hours shall be considered overtime and shall be paid for at the rate of double (2) time. All work on Saturday and Sunday shall be paid at double (2) the prevailing scale of wages.

CAMDEN COUNTY
OVERTIME SCHEDULE - BUILDING CONSTRUCTION

NO. 91: Means eight (8) hours shall constitute a day's work commencing at 8:00 a.m. and ending at 4:30 p.m., allowing one-half (½) hour for lunch. The option exists for the Employer to use a flexible starting time between the hours of 6:00 a.m. and 9:00 a.m. The regular workweek shall consist of forty (40) hours of five (5) workdays, Monday through Friday. The workweek may consist of four (4) ten (10) hour days from Monday through Thursday, with Friday as a make-up day. If the make-up day is a holiday, the employee shall be paid at the double (2) time rate. The employees shall be paid time and one-half (1½) for work performed before the regular starting time or after the regular quitting time or over eight (8) hours per work day (unless working a 10-hour work day, then time and one-half (1½) is paid for work performed over ten (10) hours a day) or over forty (40) hours per work week. Work performed on Saturdays, Sundays and recognized holidays shall be paid at the double (2) time rate of pay.

NO. 98: Means eight (8) hours a day shall constitute a standard work day, and forty (40) hours per week shall constitute a week's work which shall begin on Sunday and end on Saturday. All time worked outside of the standard work day and on Saturday shall be classified as overtime and paid the rate of time and one-half (1½) (except as herein provided). All time worked on Sunday and recognized holidays shall be classified as overtime and paid at the rate of double (2) time. The Employer has the option of working either five (5) eight-hour days or four (4) ten-hour days to constitute a normal forty (40) hour work week. When the four (4) ten-hour work week is in effect, the standard work day shall be consecutive ten (10) hour periods between the hours of 5:30 and 6:30 a.m. and 6:30 p.m. Forty (40) hours per week shall constitute a week's work, Monday through Thursday, inclusive. In the event the job is down for any reason beyond the Employer's control, then Friday and/or Saturday may, at the option of the Employer, be worked as a make-up day; straight time not to exceed ten (10) hours per day or forty (40) hours per week. When the five (5) day eight (8) hours work week is in effect forty (40) hours per week shall constitute a week's work, Monday through Friday, inclusive. In the event the job is down for any reason beyond the Employer's control, then Saturday may, at the option of the Employer, be worked as a make-up day; straight time not to exceed eight (8) hours per day or forty (40) hours per week. When the five (5) day eight (8) hour work week is in effect, starting time shall be between 7:00 a.m. and 8:00 a.m. All time worked before 7:00 a.m. shall be paid for at the rate of time and one-half (1½). All work performed on Saturday up to 6:00 p.m. (except as herein provided) shall be compensated for at the rate of time and one-half (1½). All time worked from 6:00 p.m. Saturday to 7:00 a.m. Monday will be paid for at the rate of double (2) time.

NO. 105: Means the regular work day shall be eight (8) hours. Working hours are from six (6) hours before Noon (12:00) to six hours after Noon (12:00). The regular work week shall be forty (40) hours, beginning between 6:00 a.m. and Noon (12:00) on Monday and ending between 1:00 p.m. and 6:00 p.m. on Friday. Saturday work will be paid time and one-half (1½) the regular hourly rate of pay. Work performed on Sundays and recognized holidays shall be paid at double (2) time the regular hourly rate of pay. Saturdays can be a make-up day if weather has forced a day off. But only in the week of the day being lost. Any time worked before six (6) hours before Noon (12:00) or after six (6) hours after Noon (12:00) will be paid at the time and one-half (1½) the regular hourly rate of pay.

NO. 111: Means eight (8) hours shall constitute a day's work, Monday to Friday inclusive. All overtime shall be at the rate of time and one-half (1½) except Sundays, and recognized holidays, which shall be paid for at the rate of double (2) time if worked . The work day is to begin between 6:00 a. m. and 9:00 a.m. at the option of the employer. If an employer is prevented from working forty (40) hours, Monday through Friday, or any part thereof by reason of inclement weather (rain or mud), Saturday or any part thereof may be worked as a make-up day at the straight time rate. The regular work week shall start on Monday and end on Friday, except where the employer elects to work Monday through Thursday, ten (10) hours per day. All work over ten (10) hours in a day and forty (40) hours in a week shall be one and one-half (1½) times the regular hourly rate. Work prior to 6:00 a.m. will be paid at the overtime rate. The regular work day shall be either eight (8) or ten (10) hours. Employers working a four (4) ten (10) hour day week schedule will be allowed a Friday or Saturday make-up day provided workmen were prevented from working during the normal work week due to inclement weather or other conditions beyond the control of the employer. Make-up days shall not be utilized for days lost to holidays. If a job can't work forty (40) hours Monday through Thursday because of inclement weather or other conditions beyond the control of the employer, Friday or Saturday may be worked as a make-up day at straight time (if working 4-10's). Saturday may be worked as a make-up day at straight time if working (5-8's). If an employer has started the work week on a five-day, eight-hour schedule, and due to inclement weather misses any time, then he may switch to a nine (9) or (10) hour a day schedule, at straight time, for the remainder of that work week in order to make up the lost time. Employer may not use both the Saturday make-up day and 10-hour make-up day in the same week.

CAMDEN COUNTY
OVERTIME SCHEDULE - BUILDING CONSTRUCTION

NO. 123: Means except as provided, eight (8) hours a day (8:00 A.M. to 4:30 P.M.) shall constitute a standard work day, excluding the 30-minute lunch period, and forty (40) hours per week shall constitute a week's work. All time worked outside of the standard work day and on Saturday shall be classified as overtime and paid the rate of time and one-half (except as herein provided). All time worked on Sunday and herein named holidays shall be classified as overtime and paid at the rate of double time. The Employer has the option of working either five (5) eight-hour days or four (4) ten-hour days to constitute a normal forty (40) hour work week. When the four (4) day ten-hour work week is in effect, the standard work week shall consist of forty (40) hours, Monday through Friday, which will consist of any four (4) consecutive ten (10) hour days within the five day period. In the event the job is down for any reason beyond the control of the Employer, then Friday and/or Saturday may, at the option of the Employer, be worked as a make-up day, straight time not to exceed ten (10) hours or forty (40) hours per week. Starting time will be designated by the Employer. When the five (5) day eight (8) hour work week is in effect forty (40) hours per week will constitute a week's work (normal work week being Monday through Friday). In the event the job is down for any reason beyond the control of the Employer, then Saturday may, at the option of the Employer, be worked as a make-up day; at straight time not to exceed eight (8) hours or forty (40) hours per week.

CAMDEN COUNTY
HOLIDAY SCHEDULE – BUILDING CONSTRUCTION

NO. 3: All work done on New Year's Day, Decoration Day, July 4th, Labor Day, Veteran's Day, Thanksgiving Day and Christmas Day shall be paid at the double time rate of pay. Whenever any such holidays fall on a Sunday, the following Monday shall be observed as a holiday.

NO. 4: All work done on New Year's Day, Memorial Day, Independence Day, Labor Day, Thanksgiving and Christmas Day shall be paid at the double time rate of pay. If any of the above holidays fall on Sunday, Monday will be observed as the recognized holiday. If any of the above holidays fall on Saturday, Friday will be observed as the recognized holiday.

NO. 7: All work done on New Year's Day, Memorial Day, Independence Day, Labor Day, Veteran's Day, Thanksgiving Day, and Christmas Day shall be paid at the double time rate of pay. If a holiday falls on a Sunday, it shall be observed on the following Monday. If a holiday falls on a Saturday, it shall be observed on the preceding Friday.

NO. 16: There shall be seven (7) recognized holidays: New Year's Day, Memorial Day, Independence Day, Labor Day, Armistice Day, Thanksgiving Day and Christmas Day. No work on any pretense shall be performed on Christmas Day or Independence Day. Any work performed on the other holidays shall be paid for at two (2) times the regular rate of pay.

NO. 22: All work performed on New Year's Day, Memorial Day, Independence Day, Labor Day, Thanksgiving Day, Christmas Day, or days locally observed as such, and Sunday shall be recognized as holidays. If a holiday falls on Saturday, Friday shall be observed; if it falls on Sunday, Monday shall be observed. All work performed on holidays shall be paid at the double (2) time rate of pay.

NO. 28: All work done on New Year's Day , Armistice Day (Veteran's Day), Decoration Day (Memorial Day), Independence Day (Fourth of July), Thanksgiving Day and Christmas Day shall be paid at the double time rate of pay. No work shall be performed on Labor Day except when triple (3) time is paid. When a holiday falls on Sunday, the following Monday shall be observed as the holiday.

NO. 31: All work done on New Year's Day, Presidents Day, Good Friday, Memorial Day, Fourth of July, Labor Day, Veteran's Day, Thanksgiving Day, Friday after Thanksgiving Day, Christmas Day, and Employee's Birthday shall be paid at the double time rate of pay. If a holiday falls on Sunday, the following Monday will be observed as the recognized holiday. If a holiday falls on Saturday, the preceding Friday will be observed as the recognized holiday.

NO. 49: The following days shall be observed as legal holidays: New Year's Day, Decoration Day, July 4th, Labor Day, Thanksgiving Day, Christmas Day, Employee's birthday and two (2) personal days. The observance of one (1) of the personal days to be limited to the time between December 1 and March 1 of the following year. If any of these holidays fall on Sunday, the following Monday will be observed as the holiday and if any of these holidays fall on Saturday, the preceding Friday will be observed as the holiday. If employees work on any of these holidays they shall be paid time & one-half (1½) their regular rate of pay for all hours worked.

NO. 54: All work performed on New Year's Day, Memorial Day, Independence Day, Labor Day, Veteran's Day, Thanksgiving Day, the Friday after Thanksgiving Day, and Christmas Day shall be paid at the double (2) time rate of pay. When a holiday falls on Saturday, it shall be observed on Friday. When a holiday falls on Sunday, it shall be observed on Monday.

NO. 68: All work performed on New Year's Day, Decoration Day (Memorial Day), Independence Day (Fourth of July), Labor Day, Thanksgiving Day, Christmas Day, or days observed as such, shall be paid at the rate of double (2) time. When a holiday falls on a Saturday, Friday shall be observed. When a holiday falls on a Sunday, Monday shall be observed. No work shall be performed on the Fourth of July or Labor Day except to save life or property. Where one of the holidays specified falls or is observed during the work week, then all work performed over and above thirty-two (32) hours in that week shall be paid at the rate of time and one-half (1½).

CAMDEN COUNTY
HOLIDAY SCHEDULE – BUILDING CONSTRUCTION

NO. 69: All work performed on New Year's Day, Decoration Day, July Fourth, Labor Day, Veteran's Day, Thanksgiving Day or Christmas Day shall be compensated at double (2) their straight-time hourly rate of pay. Friday after Thanksgiving and the day before Christmas will also be holidays, but if the employer chooses to work these days, the employee will be paid at straight -time rate of pay. If a holiday falls on a Sunday in a particular year, the holiday will be observed on the following Monday.

NO. 78: The following days shall be recognized as holidays: New Year's Day, Memorial Day, Independence Day, Labor Day, Thanksgiving and Christmas. If any of the above holidays fall on Sunday, Monday will be observed as the legal holiday. If any of the above holidays fall on Saturday, Friday will be observed as the legal holiday. All time worked on Sunday and herein named holidays shall be classified as overtime and paid at the rate of double time.

OCCUPATIONAL TITLE	*Effective Date of Increase	Basic Hourly Rates	Over-Time Schedule	Holiday Schedule	Total Fringe Benefits
CARPENTER					
Journeymen	5/08	$27.06	7	16	$9.51
Millwright	5/08	$27.06	7	16	$9.51
Pile Driver Worker	5/08	$27.06	7	16	$9.51
OPERATING ENGINEER					
Group I	5/08	$23.87	5	15	$11.00
Group II	5/08	$23.52	5	15	$11.00
Group III	5/08	$23.32	5	15	$11.00
Group IV	5/08	$21.27	5	15	$11.00
Oiler-Driver	5/08	$21.27	5	15	$11.00
LABORER					
General Laborer	5/08	$20.64	4	18	$9.14
Skilled Laborer	5/08	$21.19	4	18	$9.14
TRUCK DRIVER - TEAMSTER					
Group I	5/08	$25.52	12	3	$8.65
Group II	5/08	$25.68	12	3	$8.65
Group III	5/08	$25.67	12	3	$8.65
Group IV	5/08	$25.79	12	3	$8.65

For the occupational titles not listed on the Heavy Construction Rate Sheet, use Rates shown on the Building Construction Rate Sheet.

CAMDEN COUNTY
OVERTIME SCHEDULE – HEAVY CONSTRUCTION

NO. 4: Means a regular work week shall consist of not more than forty (40) hours of work, Monday through Saturday, and all work performed over and above ten (10) hours per day and forty (40) hours per week shall be paid at the rate of time & one-half (1½). Workers shall receive time and one-half (1½) for all work performed on Sundays and holidays. A work day is to begin between 6:00 a.m. and 9:00 a.m. at the option of the Employer except when inclement weather or other conditions beyond the reasonable control of the Employer prevent work, in which event, the starting time may be delayed, but not later then 12:00 noon. When a holiday falls during the normal work week, Monday through Friday, it shall be counted as eight (8) hours toward a forty (40) hour week; however, no reimbursement for this eight (8) hours is to be paid to the worker(s) unless worked.

NO. 5: Means a regular work week shall consist of not more that forty (40) hours work, Monday through Saturday, and all work performed over and above ten (10) hours per day and forty (40) hours per week shall be paid at the rate of time & one-half (1½). Workmen shall receive time and one-half (1½) for all work performed on Sundays and recognized holidays or days observed as such. Double (2) time shall be paid for work on Sunday or recognized holidays when and only if any other craft employees of the same employer at work on that same job site are receiving double (2) time pay for that Sunday or holiday. If a job can't work forty (40) hours, Monday through Saturday, because of inclement weather or other conditions beyond the control of the Employer, Friday and Saturday may be worked as make up days at straight time (if working 4-10's). Saturday may be worked as a make up day at straight time (if working 5-8's). Make up days shall not be utilized for days lost to holidays. A work day is to begin between 6:00 a.m. and 9:00 a.m. at the option of the Employer except when inclement weather or other conditions beyond the reasonable control of the Employer, including requirements of the owner, prevent work. In such event the starting time may be delayed but not later than 12:00 noon. Where one of the holidays falls or is observed during the work week, then all work performed over and above thirty-two (32) hours shall be paid at time & one-half (1½).

NO. 7: Means the regular work week shall start on Monday and end on Friday, except where the Employer elects to work Monday through Thursday, ten (10) hours per day. All work over ten (10) hours in a day or forty (40) hours in a week shall be at the overtime rate of one and one-half (1½) times the regular hourly rate. The regular work day shall be either eight (8) or ten (10) hours. If a job can't work forty (40) hours Monday through Friday because of inclement weather or other conditions beyond the control of the Employer, Friday or Saturday may be worked as a make-up day at straight time (if working 4-10's). Saturday may be worked as a make-up day at straight time (if working 5-8's). Make-up days shall not be utilized for days lost due to holidays. A workday is to begin at the option of the Employer but not later than 11:00 a.m. except when inclement weather, requirements of the owner or other conditions beyond the reasonable control of the Employer prevent work. Except as worked as a make-up day, time on Saturday shall be worked at one and one-half (1½) times the regular rate. Work performed on Sunday shall be paid at two (2) times the regular rate. Work performed on recognized holidays or days observed as such, shall also be paid at the double (2) time rate of pay.

NO. 12: Means a regular work week shall consist of not more than forty (40) hours of work and all work performed over and above ten (10) hours per day and forty (40) hours per week shall be paid at the rate of time & one-half (1½). A workday is to begin between 6:00 a.m. and 9:00 a.m. at the option of the Employer except when inclement weather or other conditions beyond the reasonable control of the Employer, in which event, the starting time may be advanced or delayed. Workers shall receive time and one-half (1½) for all work performed on recognized holidays or days observed as such.

CAMDEN COUNTY
HOLIDAY SCHEDULE – HEAVY CONSTRUCTION

NO. 3: The following days are recognized as holidays: New Year's Day, Memorial Day, Independence Day, Labor Day, Thanksgiving Day and Christmas Day. If a holiday falls on a Sunday, it shall be observed on the following Monday. No work shall be performed on Labor Day except in case of jeopardy to work under construction. This rule is applied to protect Labor Day. When a holiday falls during the normal work week, Monday through Friday, it shall be counted as eight (8) hours toward the forty (40) hour week; however, no reimbursement for this eight (8) hours is to be paid to the workmen unless worked. An Employer working a four (4) day, ten (10) hour schedule may use Friday as a make up day when an observed holiday occurs during the work week. Employees have the option to work that make up day. If workmen are required to work the above enumerated holidays, or days observed as such, they shall receive time & one-half (1½) the regular rate of pay for such work.

NO. 15: The following days are recognized as holidays: New Year's Day, Memorial Day, July Fourth, Labor Day, Thanksgiving Day and Christmas Day. If a holiday falls on Sunday, it shall be observed on the following Monday. If a holiday falls on Saturday, it shall be observed on the preceding Friday. No work shall be performed on Labor Day except in case of jeopardy to work under construction. This rule is applied to protect Labor Day. If workmen are required to work the above enumerated holidays or days observed as such, they shall receive time and one-half (1½) the regular rate of pay for such work. Where one of the holidays specified falls or is observed during the workweek, then all work performed over and above thirty-two (32) hours in that week shall be paid at the rate of time and one-half (1½). Workmen shall receive time and one-half (1 ½) for all work performed on Sundays. Double (2) time shall be paid for work on Sunday or recognized holidays when and only if any other craft employees of the same employer at work on that same job site are receiving double (2) time for that Sunday or holiday.

NO. 16: The following days are recognized as holidays: New Year's Day, Memorial Day, Fourth of July, Labor Day, Thanksgiving Day and Christmas Day. If a holiday falls on Sunday, it shall be observed on the following Monday. If a holiday falls on Saturday, it shall be observed on the preceding Friday. No work shall be performed on Labor Day except in case of jeopardy to work under construction. This rule is applied to protect Labor Day. When a holiday falls during the normal work week, Monday through Friday, it shall be counted as eight (8) hours toward the forty (40) hour week; however, no reimbursement for this eight (8) hours is to be paid to the worker unless worked. If workers are required to work the above recognized holidays or days observed as such, they shall receive double (2) the regular rate of pay for such work.

NO. 18: All work performed on New Year's Day, Memorial Day, Independence Day, Labor Day, Thanksgiving Day and Christmas Day shall be paid at the time and one-half (1½) rate of pay. If a holiday falls on Sunday, it shall be observed on the following Monday. If a holiday falls on Saturday, it shall be observed on the preceding Friday. No work shall be performed on Labor Day except in case of jeopardy to work under construction. This rule is applied to protect Labor Day. When a holiday falls during the normal work week, Monday through Friday, it shall be counted as eight (8) hours toward a forty (40) hour week; however no reimbursement for this eight (8) hours is to be paid to the working person(s) unless the holiday is worked.

REPLACEMENT PAGE
OUTSIDE ELECTRICIAN

These rates are to be used for the following counties:

Adair, Audrain, Boone, Callaway, Camden, Carter, Chariton, Clark, Cole, Cooper, Crawford, Dent, Franklin, Gasconade, Howard, Howell, Iron, Jefferson, Knox, Lewis, Lincoln, Linn, Macon, Maries, Marion, Miller, Moniteau, Monroe, Montgomery, Morgan, Oregon, Osage, Perry, Phelps, Pike, Pulaski, Putnam, Ralls, Randolph, Reynolds, Ripley, St. Charles, St. Francois, St. Louis City, St. Louis County, Ste. Genevieve, Schuyler, Scotland, Shannon, Shelby, Sullivan, Texas, Warren, and Washington

COMMERCIAL WORK

Occupational Title	Basic	Total
	Hourly	Fringe
	Rate	Benefits
*Journeyman Lineman	$33.68	$4.75 + 42%
*Lineman Operator	$29.08	$4.75 + 42%
*Groundman	$22.48	$4.75 + 42%

OVERTIME RATE: Eight (8) hours shall constitute a work day between the hours of 7:00 a.m. and 4:30 p.m. Forty (40) hours within five (5) days, Monday through Friday inclusive, shall constitute the work week. Work performed in the 9th and 10th hour, Monday through Friday, shall be paid at time and one-half (1½) the regular straight time rate of pay. Contractor has the option to pay two (2) hours per day at the time and one-half (1½) the regular straight time rate of pay between the hours of 6:00 a.m. and 5:30 p.m., Monday through Friday. Work performed outside the regularly scheduled working hours and on Saturdays, Sundays and recognized legal holidays, or days celebrated as such, shall be paid for at the rate of double (2) time.

HOLIDAY RATE: All work performed on New Year's Day, Memorial Day, Fourth of July, Labor Day, Veteran's Day, Thanksgiving Day, Christmas Day, or days celebrated as such, shall be paid at the double time rate of pay. When one of the foregoing holidays falls on Sunday, it shall be celebrated on the following Monday.

UTILITY WORK

Occupational Title	Basic	Total
	Hourly	Fringe
	Rate	Benefits
*Journeyman Lineman	$33.68	$4.75 + 39.05%
*Lineman Operator	$29.08	$4.75 + 39.05%
*Groundman	$22.48	$4.75 + 39.05%

OVERTIME RATE: Eight (8) hours shall constitute a work day between the hours of 7:00 a.m. and 4:30 p.m. Forty (40) hours within five (5) days, Monday through Friday inclusive, shall constitute the work week. Work performed in the 9th and 10th hour, Monday through Friday, shall be paid at time and one-half (1½) the regular straight time rate of pay. Contractor has the option to pay two (2) hours per day at the time and one-half (1½) the regular straight time rate of pay between the hours of 6:00 a.m. and 5:30 p.m., Monday through Friday. Worked performed in the first eight (8) hours on Saturday shall be paid at the rate of one and eight tenths (1.8) the regular straight time rate. Work performed outside these hours and on Sundays and recognized legal holidays, or days celebrated as such, shall be paid for at the rate of double (2) time.

HOLIDAY RATE: All work performed on New Year's Day, Memorial Day, Fourth of July, Labor Day, Veteran's Day, Thanksgiving Day, Christmas Day, or days celebrated as such, shall be paid at the double time rate of pay. When one of the foregoing holidays falls on Sunday, it shall be celebrated on the following Monday.

*Annual Incremental Increase