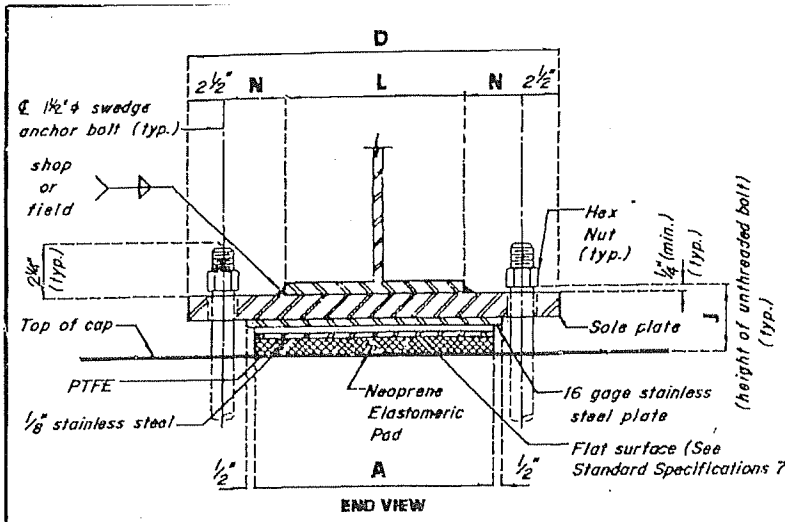

END VIEW

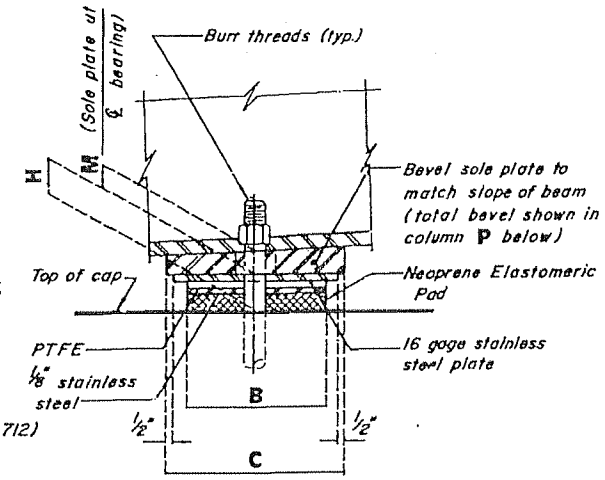

SIDE VIEW

Note: The location of anchor bolts in relation to the slotted holes in the sole plate shall correspond with the temperature at the time of erection. At 60° F. the slotted holes should center on the anchor bolts.

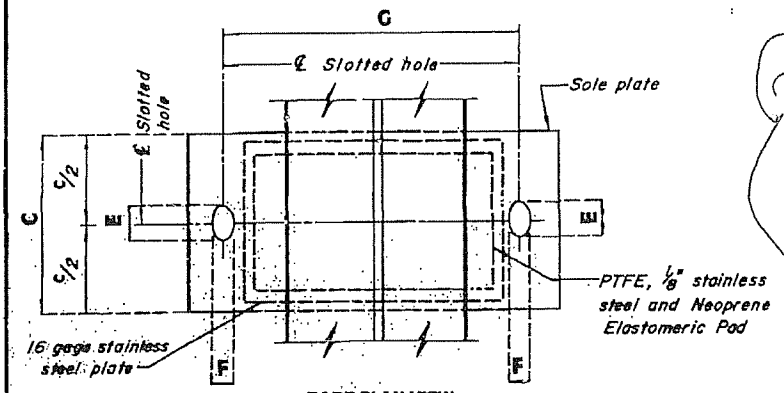

PART PLAN VIEW

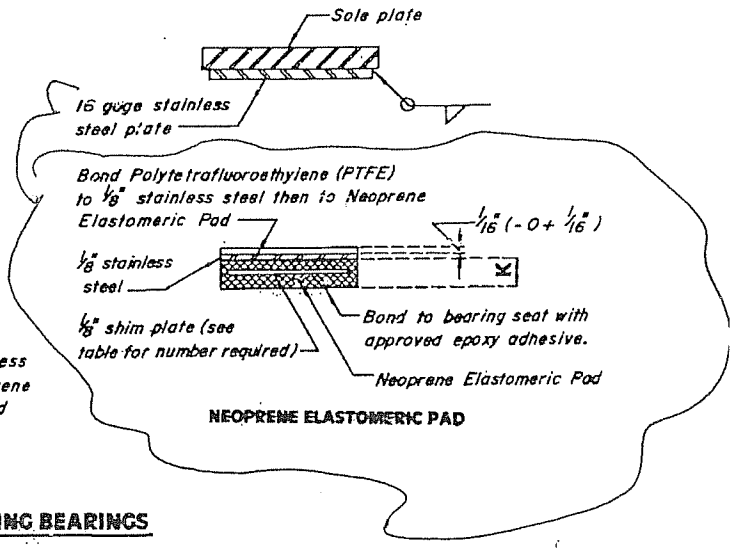

NEOPRENE ELASTOMERIC PAD

PTFE SLIDING BEARINGS

NUMBER REQUIRED = 5 @ Int. Bent No. 4
5 @ Int. Bent No. 7

2 piece

716.30

PTFE SLIDING BEARINGS

BENT NO.	A	B	C	D	E	F	G	H	J	K	L	M	N	P	NUMBER OF SHIM PLATES (*)
4 & 7	18"	12"	17"	27"	6"	1⅜"	22"	1⅜"	3⅛"	1⅛"	14"	1½"	4"	-	1

(*) THE REQUIRED SHIM PLATE SHALL BE PLACED BETWEEN EQUAL LAYERS OF ELASTOMER AND MOLDED TOGETHER TO FORM AN INTEGRAL UNIT.

DETAILS OF TYPE 'N' PTFE BEARINGS

STEEL
TYPE 'N' BRGS.
JANUARY 1980
REVISED APRIL 1988

DETAILED Dec. 1986
CHECKED Mar. 1987

Note: This drawing is not to scale. Follow dimensions.