MISSOURI DEPARTMENT OF TRANSPORTATION
INFORMAL QUOTE GUIDELINES AND DOCUMENTATION
FOR PURCHASES FROM $3,000 TO $24,999.99

THIS IS NOT AN ORDER

REQUEST FOR QUOTATION

It is the vendor's responsibility to read and comply with all conditions, specifications, and instructions outlined in this document. This document and any subsequent attachments shall supersede all confirmation forms, receipts, or any other paperwork needed to secure materials, equipment, or services.

TODAY'S DATE: AUGUST 18, 2006	**QUOTE DUE BY (DATE AND TIME):** **AUGUST 29, 2006 @ 1:00 PM**	F.O.B. REQUIREMENTS: DESTINATION (SEE DELIVERY LOCATION BELOW)
TO BE DELIVERED BY: DELIVERY IS PREFERED ASAP (BEFORE OCTOBER 17, 2006) SPECIFY DELIVERY TIME IS THE COLUMN PROVIDED BELOW	**QUOTATION # D207-005-R2** THIS QUOTATION # SHOULD BE REFERENCED ON ALL MAILING LABELS, ENVELOPES, AND ANY OTHER CORRESPONDENCE.	BUYER NAME: WILLIAM D. "BILL" NOYES, CPPO, CPPB PROCUREMENT AGENT PHONE NUMBER: (660)-385-8245 FAX NUMBER: (660)-385-1707

District Mailing Address:	Delivery Location:
Missouri Department of Transportation – District 2 General Services (Procurement) Division 902 North Missouri Street P.O. Box 8 Macon, MO. 63552	MoDOT District 2 – Sign Shop 26826 U.S. Hwy 63 Macon, MO. 63552 Rt. 63 – 0.3 miles South of Rt. DD (Macon County)

ALL QUOTATIONS MUST BE EXTENDED. DELIVERY TIME MUST BE LISTED

Qty	U/M	DESCRIPTION (including size and/or part #'s)	UNIT PRICE	UNIT PRICE EXTENSION	DELIVERY TIME
500	EA	12' Aluminum Backing Bars (per drawing ASB200P1)			

SPECIAL TERMS AND CONDITIONS

Required Specifications: All materials must meet the enclosed specification and any other provisions outlined in the solicitation documents.

Award: Award of this RFQ will be made on an "All Or Nothing" basis using the "lowest and best" principle of award.

Delivery – Additional Requirements: The Contractor shall furnish the Missouri Department of Transportation with a planned delivery schedule at least 24 hours before starting delivery. Notification should be during the normal workday preceding the day on which the Contractor desires to initiate delivery. It will be necessary for a representative of the Missouri Department of Transportation to be present when the material is delivered. No deliveries will be made on Saturdays, Sundays and holidays unless specifically authorized by the engineer.

Increase or Decrease Quantities: The Highways and Transportation Commission reserves the right to increase or decrease the quantity of materials ordered. The quantity finally ordered by the Commission will be furnished by the bidder at the same unit price.

Liquidated Damages: In the event the successful Contractor fails to deliver the material within the time specified (ON OR **BEFORE OCTOBER 17, 2006**) the Department and the public will sustain damages because of such delay in delivery, the exact extent of which would be difficult to ascertain, and in order to liquidate such damage in advance it is agreed that the sum of one-hundred dollars ($100.00) per day, per item, for each assessable calendar day on which the delivery has not been completed, is reasonable and the best estimate which the parties can arrive at as liquidated damages, and it is therefore agreed that said amount will be withheld from payments due the Contractor or otherwise collected from the Contractor as liquidated damages. Saturdays, Sundays, holidays and days whereas the Department has suspended work shall not be assessable days.

Pricing Guarantee: Pricing submitted shall be valid for a minimum period of thirty (30) days subsequent to the bid/quote/proposal closing date (or longer if specified by the contract terms herein). Submissions offering less than thirty (30) days from the closing date for acceptance by MoDOT will be considered non-responsive.

PREFERENCE IN PURCHASING PRODUCTS

DATE: _____

The bidders attention is directed to Section 34.076 RsMO 1986 which gives preference to Missouri corporations, firms, and individuals when letting contracts or purchasing products.

Bids/Quotations received will be evaluated on the basis of this legislation.

All vendors submitting a bid/quotation must furnish ALL information requested below.

FOR CORPORATIONS:

State in which incorporated: _____

FOR OTHERS:

State of domicile: _____

FOR ALL VENDORS:

List address of Missouri offices or places of business:

_____

_____

_____

_____

_____

_____

_____

THIS SECTION MUST BE COMPLETED AND SIGNED:

FIRM NAME: _____

ADDRESS: _____

CITY: _____ **STATE:** _____ **ZIP:** _____

BY (signature required): _____

Federal Tax I.D. #: _____ **if no Federal Tax I.D. # - list Social Security #:** _____

NOTE: For bid/quotation to be considered, the "Preference in Purchasing Products" form must be on file in the General Services (Procurement) Division and must be dated in the current calendar year.

CERTIFICATE OF GOOD STANDING

The Bidder must be in compliance with the laws regarding conducting business in the State of Missouri. Within ten (10) business days of notification, the Bidder will need to provide a copy of his/her Missouri Secretary of State's "Certificate of Good Standing" prior to the issuance of any contract or initial purchase order by the Missouri Department of Transportation (MoDOT). MoDOT reserves the right, at its sole discretion, to extend the date this documentation must be provided. The Bidder's inability to provide this documentation will result in his/her bid being rejected.

RsMO 34.040.6 COMPLIANCE

The Bidder must be in compliance with the laws regarding conducting business in the State of Missouri. The Bidder should ensure they are in good standing with the Missouri Department of Revenue. Prior to award MoDOT staff will check with the Missouri Department of Revenue to ensure compliance with the provisions of RsMO 34.040.6. If necessary a "Certificate of No Tax Due" may be requested of the successful Bidder. If such a certificate is requested, the Bidder's inability to provide this documentation will result in his/her bid being rejected.

VENDOR NOTES

Missouri Department of Transportation purchase orders must be issued to the invoicing company/address. If the invoicing company/address will be different from that listed in the vendor information section (below), the vendor must specify the "remit to" company/address in the vendor notes section (above).

VENDOR INFORMATION

Vendor Name/Mailing Address: Email Address:	Vendor Contact Information (including area codes): Phone #: Cellular #: Fax #:
Printed Name and Title of Responsible Officer or Employee:	Signature:

Is your company registered/certified with the State of Missouri as a (please circle):

MINORITY BUSINESS ENTERPRISE (MBE) ?	YES	NO
WOMEN BUSINESS ENTERPRISE (WBE) ?	YES	NO
Would your company like information on becoming a registered/certified MBE/WBE vendor?	YES	NO

All responses to this Request For Quotation MUST be submitted on this form and ALL pages MUST be returned to the Buyer listed above at the District mailing address or fax number shown.

Note: If any of the "Standard Solicitation Provisions" and "General Terms and Conditions" on the following pages conflict with the requirements outlined in this Request For Quotation, the RFQ requirements will supersede those below.

STANDARD SOLICITATION PROVISIONS

a. The Missouri Department of Transportation (MoDOT) reserves the right to reject any or all bids/quotes/proposals, and to accept or reject any items thereon, and to waive technicalities. In case of error in the extension of prices in the bid/quote/proposal, unit prices will govern.

b. All bids/quotes/proposals must be signed with the firm name and by a responsible officer or employee. Obligations assumed by such signature must be fulfilled.

c. By virtue of statutory authority, a preference will be given to materials, products, supplies, provisions and all other articles produced, manufactured, made or grown, within the State of Missouri.

d. Time of delivery is a part of the consideration and, if not otherwise stated in the solicitation documents, must be stated in definite terms by the Bidder/Offeror and must be adhered to. If time varies on different items, the Bidder/Offeror shall so state.

e. If providing bids/quotes/proposals for commodities, the Bidder/Offeror will state brand or make on each item. If bidding or proposing other than the make, model or brand specified, the manufacturer's name, model number or catalog number must be given.

f. **For bids/proposals of $25,000** or more, no bids/proposals by telephone, telegram or telefax will be accepted. If provided, these bids/proposals should be returned in the MoDOT solicitation return envelope.

g. If a solicitation return envelope is provided by MoDOT, the bid/quote/proposal should be returned in the envelope provided with the Bid/RFQ/RFP Request Number plainly indicated thereon.

h. The date specified for the returning of bids/quotes/proposals is a firm deadline and all bids/quotes/proposals must be received at the designated office by that time. The Department does not recognize the U.S. Mail, Railway Express Agency, Air Express, or any other organization, as its agent for purposes of accepting proposals. All proposals arriving at the designated office after the deadline specified will be rejected.

GENERAL TERMS AND CONDITIONS

General Performance

a. This work is to be performed under the general supervision and direction of the Missouri Department of Transportation (MoDOT) and, if awarded any portion of the work, the Contractor agrees to furnish at his own expense all labor and equipment required to complete the work, it being expressly understood that this solicitation is for completed work based upon the price(s) specified and is not a solicitation for rental of equipment or employment of labor by MoDOT, and MoDOT is to have no direction or control over the employees used by the Contractor in performance of the work.

Deliveries

a. Unless otherwise specified on the solicitation documents or purchase order, suppliers shall give at least 24 hours advance notice of each delivery. Delivery will only be received between the hours of 8:00 a.m. to 3:00 p.m., Monday through Friday. Material arriving after 3:00 p.m. will not be unloaded until the following workday. No material will be received on Saturday, Sunday or state holidays.

b. If the prices bid herein include the delivery cost of the material, the Contractor agrees to pay all transportation charges on the material as FOB - Destination. Freight costs must be included in the unit price bid and not listed as a separate line item.

c. Any demurrage is to be paid by the Contractor direct to the railroad or carrier.

Nondiscrimination

a. The Bidder/Offeror understands that this project involves state funds and the Bidder/Offeror awarded the contract will be required to comply with the Executive Order 05-30 of the Governor of the State of Missouri dated September 8, 2005. This order stipulates that there shall be no discriminatory employment practices by the Contractor or his subcontractors, if any, based on race, sex, religion, national origin, age, color, disability, or veteran status. The undersigned Contractor or his subcontractors, if any, shall give written notice of their commitments under this clause to any labor union with which they have bargaining or other agreements

b. The Contractor shall comply with the Regulations relative to nondiscrimination in federally-assisted programs of the Department of Transportation, Title 49, Code of Federal Regulations, Part 21, as they may be amended from time to time, (hereinafter referred to as the Regulations), which are herein incorporated by reference and made a part of this contract.

c. All solicitations either by competitive bidding or negotiation made by the Contractor for work to be performed under a subcontract, including procurements of materials or leases of the Contractor's obligations under this contract and the Regulations, will be relative to nondiscrimination on the grounds of race, color, or national origin.

1) Sanctions for Noncompliance: In the event of the Contractor's noncompliance with the nondiscrimination provisions of this contract, MoDOT shall impose such contract sanctions as it or the Federal Highway Administration may determine to be appropriate, including, but not limited to:

i. withholding of payments to the Contractor under the contract until the Contractor complies, and/or,

ii. cancellation, termination or suspension of the contract, in whole or in part.

Contract/Purchase Order

a. By submitting a bid/quote/proposal, the Bidder/Offeror agrees to furnish any and all equipment, supplies and/or services specified in the solicitation documents, at the prices quoted, pursuant to all requirements and specifications contained therein.

b. A binding contract shall consist of: (1) the solicitation documents, amendments thereto, and/or Best and Final Offer (BAFO) request(s) with any changes/additions, (2) the Contractor's proposal and/or submitted pricing, and (3) the MHTC's acceptance of the proposal and/or bid by purchase order.

c. A notice of award does not constitute an authorization for shipment of equipment or supplies or a directive to proceed with services. Before providing equipment, supplies and/or services, the Contractor must receive a properly authorized purchase order and/or notice to proceed.

d. The contract expresses the complete agreement of the parties and performance shall be governed solely by the specifications and requirements contained therein. Any change, whether by modification and/or supplementation, must be accomplished by a formal contract amendment signed and approved by and between the duly authorized representative of the Contractor and the duly authorized representative of the MHTC, by a modified purchase order prior to the effective date of such modification. The Contractor expressly and explicitly understands and agrees that no other method and/or no other document, including correspondence, acts, and oral communications by or from any person, shall be used or construed as an amendment or modification.

Subcontracting

a. It is specifically understood that no portion of the material or any interest in the contract, shall be subcontracted, transferred, assigned or otherwise disposed of, except with the written consent of MoDOT. Request for permission to subcontract or otherwise dispose of any part of the work shall be in writing to MoDOT and accompanied by a showing that the organization which will perform the work is particularly experienced and equipped for such work.

b. Consent to subcontract or otherwise dispose of any portion of the work shall not be construed to relieve the Contractor of any responsibility for the production and delivery of the contracted work and the completion of the work within the specified time.

c. All payments for work performed by a subcontractor shall be made to the Contractor to whom the contract was awarded and the purchase order issued.

Invoicing and Payment

a. MoDOT is exempt from paying Missouri Sales Tax, Missouri Use Tax and Federal Excise Tax. However, the Contractor may themselves be responsible for the payment of taxes on materials they purchase to fulfill the contract. A Federal Excise Tax Exemption Certificate will be furnished to the successful Bidder/Offeror upon request.

b. Each invoice should be itemized in accordance with items listed on the purchase order and/or contract. The statewide financial management system has been designed to capture certain receipt and payment information. Therefore, each invoice submitted must reference the purchase order number and must be itemized in accordance with items listed on the purchase order. Failure to comply with this requirement may delay processing of invoices for payment.

c. Unless otherwise provided for in the solicitation documents, payment for all equipment, supplies, and/or services required herein shall be made in arrears. The Missouri Highways and Transportation Commission (MHTC) shall not make any advance deposits.

d. The MHTC assumes no obligation for equipment, supplies, and/or services shipped or provided in excess of the quantity ordered. Any authorized quantity is subject to the MHTC's rejection and shall be returned at the Contractor's expense.

e. The MHTC reserves the right to purchase goods and services using the state purchasing card.

Applicable Laws and Regulations

a. The contract shall be construed according to the laws of the State of Missouri. The Contractor shall comply with all local, state, and federal laws and regulations related to the performance of the contract.

b. The Contractor must be registered and maintain good standing with the Secretary of State of the State of Missouri and other regulatory agencies, as may be required by law or regulations. Prior to the issuance of a purchase order and/or notice to proceed, the Contractor may be required to submit to MoDOT a copy their current Authority Certificate from the Secretary of State of the State of Missouri.

   1) Prior to the issuance of a purchase order and/or notice to proceed, all **out-of-state** Contractors **providing services** within the state of Missouri must submit to MoDOT a copy of their current Transient Employer Certificate from the Department of Revenue, in addition to a copy of their current Authority Certificate from the Secretary of State of the State of Missouri.

c. The exclusive venue for any legal proceeding relating to or arising, out of the contract shall be in the Circuit Court of Cole County, Missouri.

Preferences

a. In the evaluation of bids/quotes/proposals, preferences shall be applied in accordance with Chapter 34 RsMO. Contractors should apply the same preferences in selecting subcontractors.

b. By virtue of statutory authority, RsMO. 34.076 and 34.350 to 34.359, a preference will be given to materials, products, supplies, provisions and all other articles produced, manufactured, made or grown within the State of Missouri. Such preference shall be given when quality is equal or better and delivered price is the same or less.

   1) The attachment entitled **"PREFERENCE IN PURCHASING PRODUCTS"** must be completed and returned with the solicitation documents.

   2) The attachment entitled **"MISSOURI DOMESTIC PRODUCTS PROCUREMENT ACT"** must be completed and returned with the solicitation documents. **Applies if bid is Twenty-Five Thousand Dollars ($25,000.00) or more**

c. In the event of a tie of low bids, the MHTC reserves the right to establish the method to be used in determining the award

Remedies and Rights

a. No provision in the contract shall be construed, expressly or implied a waiver by the MHTC of any existing or future right and/or remedy available by law in the event of any claim by the MHTC of the Contractor's default or breach of contract.

b. The Contractor agrees and understands that the contract shall constitute an assignment by the Contractor to the MHTC of all rights, title and interest in and to all causes of action that the Contractor may have under the antitrust laws of the United States or State of Missouri

for which causes of action have accrued or will accrue as the result of or in relation to the particular equipment, supplies, and/or services purchased or produced by the Contractor in the fulfillment of the contract with the MHTC.

c. In the event a Contractor becomes involved in, or is threatened with, litigation with a subcontractor or supplier as a result of such direction, the Contractor may request MoDOT to enter into such litigation to protect the interests of the MHTC, and, in addition, the Contractor may request the United States to enter into such litigation to protect the interests of the United States.

Cancellation of Contract

a. The MHTC may cancel the contract at any time for a material breach of contractual obligations or for convenience by providing the Contractor with written notice of cancellation. Should the MHTC exercise its right to cancel the contract for such reasons, cancellation will become effective upon the date specified in the notice of cancellation sent to the Contractor.

b. If the MHTC cancels the contract for breach, the MHTC reserves the right to obtain the equipment, supplies, and/or services to be provided pursuant to the contract from other sources and upon such terms and in such manner as the MHTC deems appropriate and charge the Contractor for any additional costs incurred thereby.

Bankruptcy or Insolvency

a. Upon filing for any bankruptcy or insolvency proceeding by or against the Contractor, whether voluntary or involuntary, or upon the appointment of a receiver, trustee, or assigned the benefit or creditors, the Contractor must notify MoDOT immediately. Upon learning of any such actions, the MHTC reserves the right, at its sole discretion, to either cancel the contract or affirm the contract and hold the Contractor responsible for damages.

Inventions, Patents, and Copyrights

a. The Contractor shall defend, protect, and hold harmless the MHTC, its officers, agents, and employees against all suits of law or in equity resulting from patent and copyright infringement concerning the Contractor's performance or products produced under the terms of the contract.

Inspection and Acceptance

a. No equipment, supplies, and/or services received by MoDOT pursuant to a contract shall be deemed accepted until MoDOT has had reasonable opportunity to inspect said equipment, supplies, and/or services.

b. All equipment, supplies, and/or services which do not comply with the specifications and/or requirements or which are otherwise unacceptable or defective may be rejected. In addition, all equipment, supplies, and/or services which are discovered to be defective or which do not conform to any warranty of the Contractor upon inspection (or at any later time if the defects contained were not reasonably ascertainable upon the initial inspection) may be rejected.

c. The MHTC reserves the right to return any such rejected shipment at the Contractor's expense for full credit or replacement and to specify a reasonable date by which replacements must be received.

d. The MHTC's right to reject any unacceptable equipment, supplies, and/or services shall not exclude any other legal, equitable or contractual remedies the MHTC may have.

Warranty

a. The Contractor expressly warrants that all equipment, supplies, and/or services provided shall: (1) conform to each and every specification, drawing, sample or other description which was furnished to or adopted by MoDOT, (2) be fit and sufficient for the purpose expressed in the solicitation documents, (3) be merchantable, (4) be of good materials and workmanship, and (5) be free from defect.

b. Such warranty shall survive delivery and shall not be deemed waived either by reason of the MHTC's acceptance of or payment for said equipment, supplies, and/or services.

Status of Independent Contractor

a. The Contractor represents itself to be an independent Contractor offering such services to the general public and shall not represent itself or its employees to be an employee of the MHTC. Therefore, the Contractor shall assume all legal and financial responsibility for taxes, FICA, employee fringe benefits, workers' compensation, employee insurance, minimum wage requirements, overtime, etc., and agrees to indemnify, save and hold the MHTC, its officers, agents and employees harmless from and against any and all losses (including attorney fees) and damage of any kind related to such matter.

Indemnification

a. The Contractor shall be responsible for injury or damages as a result of any services and/or goods rendered under the terms and conditions of this Agreement.

b. In addition to the liability imposes upon the Contractor on the account of personal injury, bodily injury, including death, or property damage, suffered as a result of the Contractor's performance under this Agreement, the Contractor assumes the obligation to save harmless the Commission, including its agents, employees and assigns, and to indemnify the Commission, including its agents, employees and assigns, from every expense, liability or payment arising out of such wrongful or negligent act or omission, including legal fees.

c. The Contractor also agrees to hold harmless the Commission, including its agents, employees, and assigns, from any wrongful or negligent act or omission committed by any subcontractor or other person employed by or under the supervision of the Contractor for any purpose under this Agreement, and to indemnify the Commission, including its agents, employees or assigns, from every expense, liability or payment arising out of such wrongful or negligent act or omission.

IF NOT SUBMITTING A QUOTE, PLEASE COMPLETE AND RETURN THE FOLLOWING "NO RESPONSE FORM" TO ASSIST THE PROCUREMENT STAFF IN OUR PROCESS EVALUATIONS.

THANK YOU

NO QUOTE

DATE: _____

TO: Missouri Department of Transportation – District 2
General Services (Procurement) Division
902 North Missouri Street P.O. Box 8
Macon, MO. 63552
(660)-385-1707 – fax #

FROM: _____

_____

_____

Our company is submitting "NO QUOTE" on RFQ # _____ for the reason(s) indicated below:

( ) Product or service is not available or cannot meet the required specifications

( ) Other obligations – cannot make required deadline

( ) The delivery point or work location is outside of our territory or coverage/service area

( ) Other – Please explain below:

_____

_____

_____

Company Contact Person: _____ Phone # _____

( ) Please keep our name on the bidder's list for future opportunities on this product or service.
( ) Please remove our name for your bidder's list for this product or service.

FAILURE TO RETURN A QUOTE OR THIS FORM MAY RESULT IN REMOVAL FROM OUR VENDOR DATABASE FOR FUTURE OPPORTUNITIES

PART#	ASB200P1	*Do not scale drawing-work to dimensions *All tolerances +/- 1/64" unless otherwise noted *Unit of Measure - Inches	**Xcessories Squared Dev. & Mfg.** Auburn, IL 62615 tel: 217-438-3535 fax: 217-438-3917

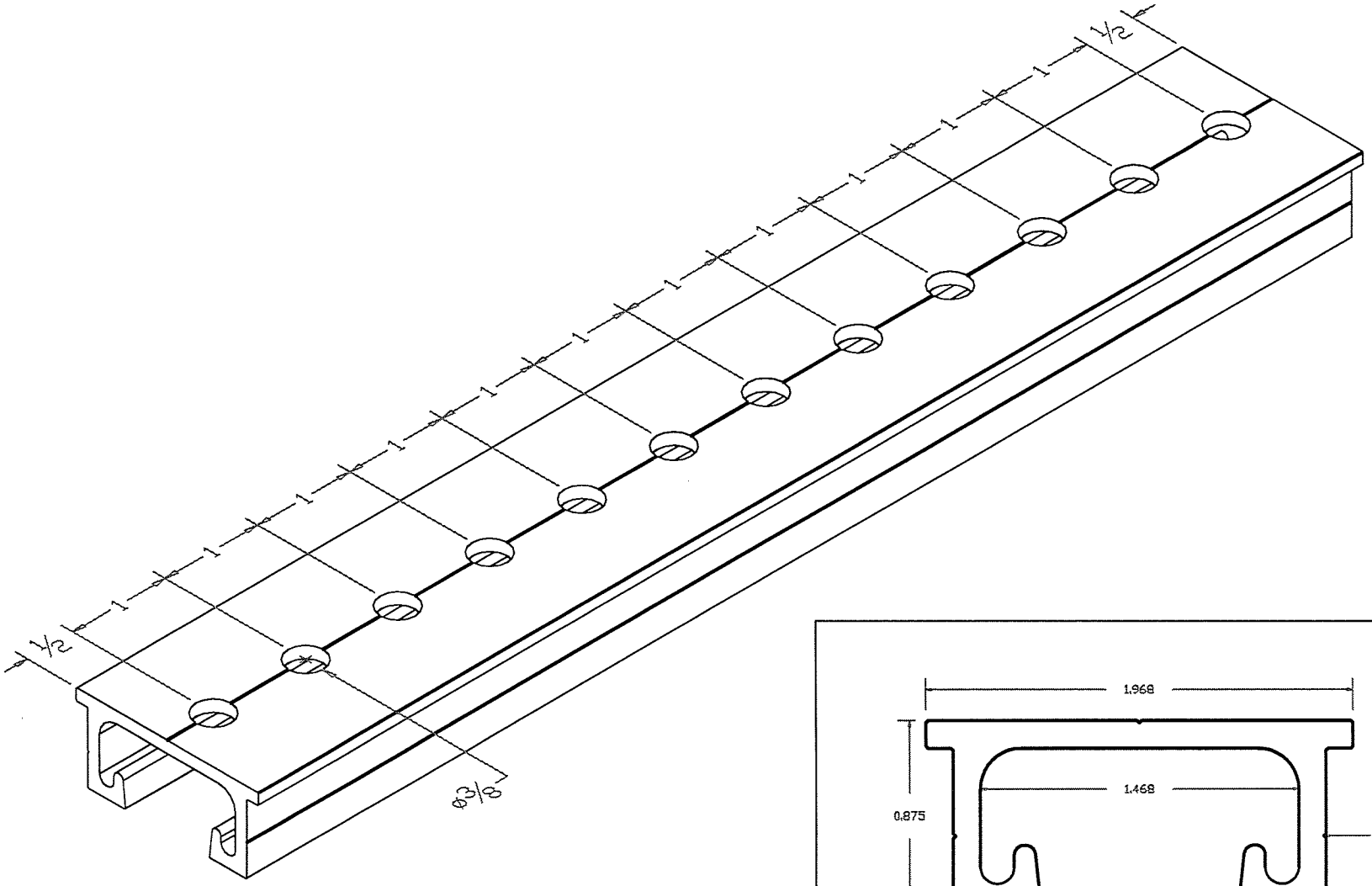

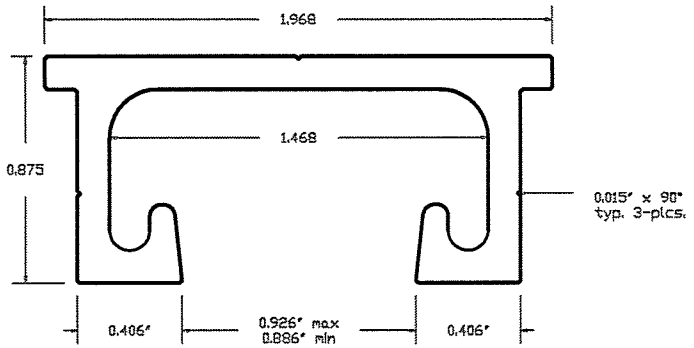

DESCRIPTION	MATERIALS	FINISH	DRAWN BY	WEIGHT	DWG#	DATE
Aluminum Sign Brace with Ø3/8" holes on 1" centers - entire length	6061-T6 Aluminum Alloy ASTM B308: ultimate strength - 40 KSI: yield strength - 36 KSI	mill finish	MEL	64 lbs./cft	32800-A	06-14-01

Supercedes Previous drawings