Missouri
Department
of Transportation

Roger Schwartze, District Engineer

Central District
1511 Missouri Boulevard
P.O. Box 718
Jefferson City, MO 65102
(573) 751-3322
fax (573) 522-1059
Toll free 1-888 ASK MoDOT
www.modot.org

June 8, 2009

GENERAL SERVICES: BID REQUEST D5-09-049B
Sealed bid for pavement marking, U.S. Highway 54 and I-70 overpass, Callaway County, MO.

Sealed bids for the placement of pavement markings will be received by the Missouri Department of Transportation, Jefferson City, Missouri, until **1:00 P.M., CDST, June 18, 2009,** and at that time will be publicly opened and read at MoDOT District 5, General Services, 1511 Missouri Blvd in Jefferson City, Missouri 65102.

Bid is to be returned in a sealed envelope plainly marked **BID # D5-09-049B Pavement Marking - District 5.**

The date specified for the receiving of bids is a firm deadline and all bids must be received at the designated office by that time. The Department does not recognize the U.S. Mail, United Parcel Service, Air Express, or any other organization, as its agent for purposes of accepting proposals. Any proposals arriving at the designated office after the deadline specified will not be considered.

The attached form identified as **"PREFERENCE IN PURCHASING PRODUCTS"** must be on file in this office and must be dated in the current calendar year. Bidders must also complete and return with their bid the form identified as **"MISSOURI DOMESTIC PRODUCTS PROCUREMENT ACT."**

The right is reserved by the Missouri Highways and Transportation Commission to reject any or all bids and no award is final until formally approved by the Commission.

By _____
Sheldon Redel, District 5 MoDOT
Procurement Agent
(573) 751-7708

BID PROPOSAL

The Missouri Department of Transportation desires to establish pricing for the removal and placement of pavement markings at the listed location.

Location
Kingdom City US Hwy 54 and I-70 overpass including the Eastbound and Westbound ramps.

Project Scope

Contractor to Provide:

- Remove existing material.
- Prep surface for new material.
- Install new 3M 380-IES Stamark Tape to manufacturer recommendations. All new tape should include the standard manufacturer warranty. Warranty begins upon completion of project.
- All work must be done in compliance with the Missouri Standard Specifications for Highway Construction, 2004 edition and MoDOT Standard Plans for Highway Construction, Section 620 (and all supplemental provisions).

Approximate number of pavement markings (all concrete):
8 – Islands
12 – Right Arrows
18 – Left Arrows
3 – Sets of Puppy Tracks (2' stripe with a 4' gap, each set approximately 100' long)
25 – Stop Bars
7 – Only's

Contractor is responsible for reviewing the worksite pertaining to this bid.

The Project Coordinator, Patty Bates (573) 526-3371, will provide the awarded bidder the exact location of markings.

Unique Site Conditions
Awarded vendor shall be responsible for traffic control as per the MUTCD. Working hours are limited to night work, Monday thru Thursday 7 p.m. to 6 a.m. Unless otherwise agreed upon via approval by the Project Coordinator.

No work will be allowed on Holidays or weekends.

The awarded vendor must also submit traffic control plan and lane closure forms to the Project Coordinator and have approved seven days prior to beginning work.

Start Date
Notice to Proceed will follow after contract is signed by both the awarded bidder and the Missouri Department of Transportation.

Completion Date
Must be completed within three weeks of Notice to Proceed.

Inspection
All work will be inspected during construction. A final inspection will be made to determine compliance of standard specifications.

Payment
Payment will be made only after the Project Coordinator completes the final inspection.

Prevailing Wage
Winning bidder of the project must comply with General Wage Order #52 for Callaway County, as published by the Missouri Department of Labor and Industrial Relations.

Contacts
If you have any questions regarding the pavement marking requirements or traffic control, please call: Patty Bates at 573-526-3371.

All other questions concerning this bid, you may contact Sheldon Redel at (573) 751-7708.

ADDITIONAL NOTES

All awarded bidders MUST:

1. Be in compliance with House Bill 600, Section 34.040.6 RSMo, which states MoDOT is precluded from contracting with a vendor or its affiliate who makes sales at retail of tangible personal property or for the purpose of storage, use or consumption in this state but fails to collect and properly pay the tax as provided in RSMo 144, their number is (573) 751-9268.

2. Be in good standing with the Secretary of State's office prior to issuance of 'Notice to Proceed.' Their phone number is (573) 751-4936.

3. Pursuant to 285.530 RSMo, the bidder must affirm its enrollment and participation in a federal work authorization program with respect to the employees proposed to work in connection with the services requested herein by

Submitting a completed, notarized copy of AFFIDAVIT OF WORK AUTHORIZATION, and

Proving documentation affirming the bidder's enrollment and participation in a federal work authorization program (see below) with respect to the employees proposed to work in connection with the services request herein.

E-verify is an example of a federal work authorization program. Acceptable enrollment and participation documentation consists of completed copy of the E-Verify Memorandum of Understanding (MOU). For vendors that are not already enrolled and participating in a federal work authorization program. E-Verify is available at http://www.dhs.gov/xprevprot/programs/gc_1185221678150.shtm

If it cannot be determined that a vendor is compliant with the above, it shall be the vendors responsibility to provide the documentation within a reasonable amount of time in relation to the needs within the bid.

Awarded Vendor may be required to fill out a Vendor Registration Form if vendor has not conducted business with the State of Missouri within the last five (5) years, in order to allow the Missouri Department of Transportation to pay invoice.

4. Submit a Bid/Proposal Guaranty and Contract Bond

Each bid shall be accompanied by a Bid Bond, Certified Check, Cashier's Check or Bank Money Order payable to the Director of Revenue – Credit State Road Fund for an amount equal to Five Percent (5%) of the amount of the BID submitted. This is to act as a guarantee that the bidder, if awarded the contract, will furnish an acceptable performance and payment bond (Contract Bond) or a cashier's check, a bank money order or a certified check made payable to "Director of Revenue--Credit State Road Fund" in an amount equal to One Hundred (100%) of the contract price.

If a BID BOND is used (in lieu of a certified check, cashier's check, or bank money order), it must be in the form provided and executed by the bidder as principal and by a surety company authorized to do business in the State of Missouri as surety. The agent executing the same on behalf of the surety company must attach a current Power of Attorney setting forth his authority to execute the bond involved.

Certified Checks, Cashier's Checks or Bank Money Orders of unsuccessful bidders will be returned as soon as the award is made. The checks or bank money orders of the successful bidder(s) will be retained until the contract is executed and a satisfactory Performance and Payment (Contract Bond) is furnished. Bid Bonds will not be returned except on specific request of the bidder.

Failure to execute the contract and file acceptable performance payment (Contract Bond) or cashier's check, bank money order or certified check within **15 days** after the contract has been mailed to the bidder shall be just cause for the cancellation of the award and the forfeiture of the proposal guaranty. Award may then be made to the next lowest responsible bidder, or the work may be re-advertised and performed under contract or otherwise, as the Commission may decide. No contract shall be considered effective until it has been executed by all parties thereto.

Insurance

Contractor must carry the Liability Insurance as listed in the Terms and Conditions. Insurance should be submitted at time of bid.

PRICING/ENDORSEMENT PAGE

Pricing/Award
Award of contract will be based on the lowest total square foot price to complete the above listed repairs.

MoDOT reserves the right to increase or decrease the number of markings in relation to the scope of work of this bid.

Item 1
Removal of existing material

$_____ per square foot

Item 2
Prep surface for new material and install new 3M 380-IES Stamark Tape

$_____ per square foot

TOTAL Price

$_____ per square foot.

SEALED BIDS TO BE MAILED TO:
Missouri Department of Transportation
D5 General Services/Procurement
1511 Missouri Blvd.
Jefferson City, MO 65102
Clearly Marked: Bid Request D5-09-049B Pavement Marking - District 5

Firm: _____

Street: _____

City: _____

State: _____ Zip: _____

Phone: _____

Fax: _____

Name: _____

Signature: _____

Email: _____

STANDARD SOLICITATION PROVISIONS

a. The Missouri Department of Transportation (MoDOT) reserves the right to reject any or all bids/quotes/proposals, and to accept or reject any items thereon, and to waive technicalities. In case of error in the extension of prices in the bid/quote/proposal, unit prices will govern.

b. All bids/quotes/proposals must be signed with the firm name and by a responsible officer or employee. Obligations assumed by such signature must be fulfilled.

c. By virtue of statutory authority, a preference will be given to materials, products, supplies, provisions and all other articles produced, manufactured, made or grown, within the State of Missouri.

d. Time of delivery is a part of the consideration and, if not otherwise stated in the solicitation documents, must be stated in definite terms by the Bidder/Offeror and must be adhered to. If time varies on different items, the Bidder/Offeror shall so state.

e. If providing bids/quotes/proposals for commodities, the Bidder/Offeror will state brand or make on each item. If bidding or proposing other than the make, model or brand specified, the manufacturer's name, model number or catalog number must be given.

f. **For bids/proposals of $25,000** or more, no bids/proposals by telephone, telegram or telefax will be accepted.

g. The date specified for the returning of bids/quotes/proposals is a firm deadline and all bids/quotes/proposals must be received at the designated office by that time. The Department does not recognize the U.S. Mail, Railway Express Agency, Air Express, or any other organization, as its agent for purposes of accepting proposals. All proposals arriving at the designated office after the deadline specified will be rejected.

GENERAL TERMS AND CONDITIONS

General Performance

a. This work is to be performed under the general supervision and direction of the Missouri Department of Transportation (MoDOT) and, if awarded any portion of the work, the Contractor agrees to furnish at his own expense all labor and equipment required to complete the work, it being expressly understood that this solicitation is for completed work based upon the price(s) specified and is not a solicitation for rental of equipment or employment of labor by MoDOT, and MoDOT is to have no direction or control over the employees used by the Contractor in performance of the work.

Deliveries

a. Unless otherwise specified on the solicitation documents or purchase order, suppliers shall give at least 24 hours advance notice of each delivery. Delivery will only be received between the hours of 8:00 a.m. to 3:00 p.m., Monday through Friday. Material arriving after 3:00 p.m. will not be unloaded until the following workday. No material will be received on Saturday, Sunday or state holidays.

b. If the prices bid herein include the delivery cost of the material, the Contractor agrees to pay all transportation charges on the material as FOB - Destination. Freight costs must be included in the unit price bid and not listed as a separate line item.

c. Any demurrage is to be paid by the Contractor direct to the railroad or carrier.

Nondiscrimination

a. The Contractor shall comply with the Regulations relative to nondiscrimination in federally-assisted programs of the Department of Transportation, Title 49, Code of Federal Regulations, Part 21, as they may be amended from time to time, (hereinafter referred to as the Regulations), which are herein incorporated by reference and made a part of this contract.

b. All solicitations either by competitive bidding or negotiation made by the Contractor for work to be performed under a subcontract, including procurements of materials or leases of the Contractor's obligations under this contract and the Regulations, will be relative to nondiscrimination on the grounds of race, color, or national origin.

1) Sanctions for Noncompliance: In the event of the Contractor's noncompliance with the nondiscrimination provisions of this contract, MoDOT shall impose such contract sanctions as it or the Federal Highway Administration may determine to be appropriate, including, but not limited to:

i. withholding of payments to the Contractor under the contract until the Contractor complies, and/or,

ii. cancellation, termination or suspension of the contract, in whole or in part.

Contract/Purchase Order

a. By submitting a bid/quote/proposal, the Bidder/Offeror agrees to furnish any and all equipment, supplies and/or services specified in the solicitation documents, at the prices quoted, pursuant to all requirements and specifications contained therein.

b. A binding contract shall consist of: (1) the solicitation documents, amendments thereto, and/or Best and Final Offer (BAFO) request(s) with any changes/additions, (2) the Contractor's proposal and/or submitted pricing, and (3) the MHTC's acceptance of the proposal and/or bid by purchase order or post-award contract.

c. A notice of award does not constitute an authorization for shipment of equipment or supplies or a directive to proceed with services. Before providing equipment, supplies and/or services, the Contractor must receive a properly authorized purchase order and/or notice to proceed.

d. The contract expresses the complete agreement of the parties and performance shall be governed solely by the specifications and requirements contained therein. Any change, whether by modification and/or supplementation, must be accomplished by a formal contract amendment signed and approved by and between the duly authorized representative of the Contractor and the duly authorized representative of the MHTC, by a modified purchase order prior to the effective date of such modification. The Contractor expressly and explicitly understands and agrees that no other method and/or no other document, including correspondence, acts, and oral communications by or from any person, shall be used or construed as an amendment or modification.

Subcontracting

a. It is specifically understood that no portion of the material or any interest in the contract, shall be subcontracted, transferred, assigned or otherwise disposed of, except with the written consent of MoDOT. Request for permission to subcontract or otherwise dispose of any part of the work shall be in writing to MoDOT and accompanied by documentation showing that the organization which will perform the work is particularly experienced and

equipped for such work.

b. Consent to subcontract or otherwise dispose of any portion of the work shall not be construed to relieve the Contractor of any responsibility for the production and delivery of the contracted work and the completion of the work within the specified time.

c. All payments for work performed by a subcontractor shall be made to the Contractor to whom the contract was awarded and the purchase order issued.

Invoicing and Payment

a. MoDOT is exempt from paying Missouri Sales Tax, Missouri Use Tax and Federal Excise Tax. However, the Contractor may themselves be responsible for the payment of taxes on materials they purchase to fulfill the contract. A Project Tax Exemption Certificate will be furnished to the successful Bidder/Offeror upon request if applicable.

b. Each invoice should be itemized in accordance with items listed on the purchase order and/or contract. The statewide financial management system has been designed to capture certain receipt and payment information. Therefore, each invoice submitted must reference the purchase order number and must be itemized in accordance with items listed on the purchase order. Failure to comply with this requirement may delay processing of invoices for payment.

c. Unless otherwise provided for in the solicitation documents, payment for all equipment, supplies, and/or services required herein shall be made in arrears. The Missouri Highways and Transportation Commission (MHTC) shall not make any advance deposits.

d. The MHTC assumes no obligation for equipment, supplies, and/or services shipped or provided in excess of the quantity ordered. Any authorized quantity is subject to the MHTC's rejection and shall be returned at the Contractor's expense.

e. The MHTC reserves the right to purchase goods and services using the state-purchasing card.

Applicable Laws and Regulations

a. The contract shall be construed according to the laws of the State of Missouri. The Contractor shall comply with all local, state, and federal laws and regulations related to the performance of the contract.

b. The Contractor must be registered and maintain good standing with the Secretary of State of the State of Missouri and other regulatory agencies, as may be required by law or regulations. Prior to the issuance of a purchase order and/or notice to proceed, the Contractor may be required to submit to MoDOT a copy of their current Authority Certificate from the Secretary of State of the State of Missouri.

1) Prior to the issuance of a purchase order and/or notice to proceed, all **out-of-state** Contractors **providing services** within the state of Missouri must submit to MoDOT a copy of their current Transient Employer Certificate from the Department of Revenue, in addition to a copy of their current Authority Certificate from the Secretary of State of the State of Missouri.

c. The exclusive venue for any legal proceeding relating to or arising, out of the contract shall be in the Circuit Court of Cole County, Missouri.

Executive Order

a. The Contractor shall comply with all the provisions of Executive Order 07-13, issued by the Honorable Matt Blunt, Governor of Missouri, on the sixth (6th) day of March, 2007. This Executive Order, which promulgates the State of Missouri's position to not tolerate persons who contract with the state engaging in or supporting illegal activities of employing individuals who are not eligible to work in the United States, is incorporated herein by reference and made a part of this Agreement.

1) "By signing this Agreement, the Contractor hereby certifies that any employee of the Contractor assigned to perform services under the contract is eligible and authorized to work in the United States in compliance with federal law."

2) In the event the Contractor fails to comply with the provisions of the Executive Order 07-13, or in the event the Commission has reasonable cause to believe that the contractor has knowingly employed individuals who are not eligible to work in the United States in violation of federal law, the Commission reserves the right to impose such contract sanctions as it may determine to be appropriate, including but not limited to contract cancellation, termination or suspension in whole or in part or both.

3) The Contractor shall include the provisions of this paragraph in every subcontract. The Contractor shall take such action with respect to any subcontract as the Commission may direct as a means of enforcing such provisions, including sanctions for noncompliance.

Preferences

a. In the evaluation of bids/quotes/proposals, preferences shall be applied in accordance with Chapter 34 RSMo. Contractors should apply the same preferences in selecting subcontractors.

b. By virtue of statutory authority, RSMo. 34.076 and 34.350 to 34.359, a preference will be given to materials, products, supplies, provisions and all other articles produced, manufactured, made or grown within the State of Missouri. Such preference shall be given when quality is equal or better and delivered price is the same or less.

1) If attached, the document entitled **"PREFERENCE IN PURCHASING PRODUCTS"** should be completed and returned with the solicitation documents.

2) If attached, the document entitled **"MISSOURI DOMESTIC PRODUCTS PROCUREMENT ACT"** should be completed and returned with the solicitation documents**. Applies if bid is Twenty-Five Thousand Dollars ($25,000.00) or more.**

c. By virtue of statutory authority, RSMo 34.074, a preference will be given all contracts for the performance of any job or service to service-disabled veteran business either doing business as Missouri firms, corporations, or individuals; or which maintain Missouri offices or places of business, when the quality of performance promised is equal or better and the price quoted is the same or less or whenever competing bids, in their entirety, are comparable.

1) If attached, the document entitled **"MISSOURI SERVICE-DISABLED VETERAN PREFERENCE"** should be completed and returned with the solicitation documents.

d. In the event of a tie of low bids, the MHTC reserves the right to establish the method to be used in determining the award

Remedies and Rights

a. No provision in the contract shall be construed, expressly or implied, as a waiver by the MHTC of any existing or future right and/or remedy available by law in the event of any claim by the MHTC of the Contractor's default or breach of contract.

b. The Contractor agrees and understands that the contract shall constitute an assignment by the Contractor to the MHTC of all rights, title and interest in and to all causes of action that the Contractor may have under the antitrust laws of the United States or State of Missouri for which causes of action have accrued or will accrue as the result of or in relation to the particular equipment, supplies, and/or services purchased or produced by the Contractor in the fulfillment of the contract with the MHTC.

c. In the event a Contractor becomes involved in, or is threatened with, litigation with a subcontractor or supplier as a result of such direction, the Contractor may request MoDOT to enter into such litigation to protect the interests of the MHTC, and, in addition, the Contractor may request the United States to enter into such litigation to protect the interests of the United States.

Cancellation of Contract

a. The MHTC may cancel the contract at any time for a material breach of contractual obligations or for convenience by providing the Contractor with written notice of cancellation. Should the MHTC exercise its right to cancel the contract for such reasons, cancellation will become effective upon the date specified in the notice of cancellation sent to the Contractor.

b. If the MHTC cancels the contract for breach, the MHTC reserves the right to obtain the equipment, supplies, and/or services to be provided pursuant to the contract from other sources and upon such terms and in such manner as the MHTC deems appropriate and charge the Contractor for any additional costs incurred thereby.

Bankruptcy or Insolvency

a. Upon filing for any bankruptcy or insolvency proceeding by or against the Contractor, whether voluntary or involuntary, or upon the appointment of a receiver, trustee, or assigned the benefit or creditors, the Contractor must notify MoDOT immediately. Upon learning of any such actions, the MHTC reserves the right, at its sole discretion, to either cancel the contract or affirm the contract and hold the Contractor responsible for damages.

Inventions, Patents, and Copyrights

a. The Contractor shall defend, protect, and hold harmless the MHTC, its officers, agents, and employees against all suits of law or in equity resulting from patent and copyright infringement concerning the Contractor's performance or products produced under the terms of the contract.

Inspection and Acceptance

a. No equipment, supplies, and/or services received by MoDOT pursuant to a contract shall be deemed accepted until MoDOT has had reasonable opportunity to inspect said equipment, supplies, and/or services.

b. All equipment, supplies, and/or services which do not comply with the specifications and/or requirements or which are otherwise unacceptable or defective may be rejected. In addition, all equipment, supplies, and/or services which are discovered to be defective or which do not conform to any warranty of the Contractor upon inspection (or at any later time if the defects contained were not reasonably ascertainable upon the initial inspection) may be rejected.

c. The MHTC reserves the right to return any such rejected shipment at the Contractor's expense for full credit or replacement and to specify a reasonable date by which replacements must be received.

d. The MHTC's right to reject any unacceptable equipment, supplies, and/or services shall not exclude any other legal, equitable or contractual remedies the MHTC may have.

Warranty

a. The Contractor expressly warrants that all equipment, supplies, and/or services provided shall: (1) conform to each and every specification, drawing, sample or other description which was furnished to or adopted by MoDOT, (2) be fit and sufficient for the purpose expressed in the solicitation documents, (3) be merchantable, (4) be of good materials and workmanship, and (5) be free from defect.

b. Such warranty shall survive delivery and shall not be deemed waived either by reason of the MHTC's acceptance of or payment for said equipment, supplies, and/or services.

Status of Independent Contractor

a. The Contractor represents itself to be an independent Contractor offering such services to the general public and shall not represent itself or its employees to be an employee of the MHTC. Therefore, the Contractor shall assume all legal and financial responsibility for taxes, FICA, employee fringe benefits, workers' compensation, employee insurance, minimum wage requirements, overtime, etc., and agrees to indemnify, save and hold the MHTC, its officers, agents and employees harmless from and against any and all losses (including attorney fees) and damage of any kind related to such matters.

Indemnification

a. The Offeror shall defend, indemnify and hold harmless the Commission, including its members and department employees, from any claim or liability whether based on a claim for damages to real or personal property or to a person for any matter relating to or arising out of the Offeror's performance of its obligations under this Agreement.

SPECIAL TERMS AND CONDITIONS

Insurance

(1) Prior to contract signing, the Offeror may be asked about its ability to provide certificates of insurance which meet, or approach, the following coverages:

a. General Liability	Not less than $500,000 for any one person in a single accident or occurrence, and not less than $3,000,000 for all claims arising out of a single occurrence;
b. Automobile Liability	Not less than $500,000 for any one person in a single accident or occurrence, and not less than $3,000,000 for all claims arising out of a single occurrence;

c. Missouri State Workmen's Compensation policy or equivalent in accordance with state law.

Required Specifications

a. All materials, equipment, and/or services bid upon must comply with the attached MoDOT Specification and any other provisions outlined in the solicitation documents.

b. The material to be supplied under the contract will comply with the quality and gradation requirements of the **Missouri Standard Specifications for Highway Construction, Edition of 2004,** and any revisions thereto, unless modified by these specifications.

Proposal/Bid Guaranty/Contract Bond

a. Each proposal shall be accompanied by a Bid Bond, Certified Check, Cashier's Check or Bank Money Order payable to the Director of Revenue – Credit State Road Fund for an amount equal to Five Percent (5%) of the amount of the BID submitted. This is to act as a guarantee that the bidder, if awarded the contract, will furnish an acceptable performance and payment bond (Contract Bond) or a cashier's check, a bank money order or a certified check made payable to "Director of Revenue--Credit State Road Fund" in an amount equal to One Hundred (100%) of the contract price.

b. If a BID BOND is used (in lieu of a certified check, cashier's check, or bank money order), it must be in the form provided and executed by the bidder as principal and by a surety company authorized to do business in the State of Missouri as surety. The agent executing the same on behalf of the surety company must attach a current Power of Attorney setting forth his authority to execute the bond involved.

c. Certified Checks, Cashier's Checks or Bank Money Orders of unsuccessful bidders will be returned as soon as the award is made. The checks or bank money orders of the successful bidder(s) will be retained until the contract is executed and a satisfactory Performance and Payment (Contract Bond) is furnished. Bid Bonds will not be returned except on specific request of the bidder.

Information and Reports

a. The Contractor shall provide all information and reports required by the Regulations, or Directives issued pursuant thereto, and shall permit access to its books, records, accounts, other sources of information, and its facilities as may be determined by the Missouri Department of Transportation or the Federal Highway Administration to be pertinent to ascertain compliance with such Regulations or Directives. Where any information required of a Contractor is in the exclusive possession of another who fails or refuses to furnish this information the Contractor shall so certify to the Missouri Department of Transportation, or the Federal Highway Administration as appropriate, and shall set forth what efforts it has made to obtain the information.

Prevailing Wage

a. If the bid/quote/proposal is accepted, the vendor will be required to comply with the prevailing wages as fixed by the Missouri Department of Labor and Industrial Relations, in effect as of the date of the issuance of the solicitation, for each affected craft and type of workmen in the following county(ies): Callaway. The Annual Wage Order #52 may be inspected at any District Office or at the Central Office in Jefferson City, MO.

b. The Contractor shall submit notarized weekly payroll affidavit documentation included with the project request for payment. The successful vendor must provide a lien waiver from all material suppliers.

Permits, Licenses and Safety Issues

a. The contract price shall include any necessary permits and licenses required by law incidental to the work. Local ordinances requiring building permits are not applicable to state agencies.

b. The Contractor will comply with local laws involving safety in the prosecution of the work.

Award

a. Award of this bid/quote/proposal will be made on an “All Or Nothing” basis using the “lowest and best” principle of award.

Failure to Execute Contract

a. Failure to execute the contract and file acceptable performance payment (Contract Bond) or cashier's check, bank money order or certified check within **15 days** after the contract has been mailed to the bidder shall be just cause for the cancellation of the award and the forfeiture of the proposal guaranty. Award may then be made to the next lowest responsible bidder, or the work may be re-advertised and performed under contract or otherwise, as the Commission may decide. No contract shall be considered effective until it has been executed by all parties thereto.

Notice to Proceed

a. Within **30 days** after the execution of the contract, a **"Notice to Proceed"** will be issued by the Department. A purchase order will be attached to the "Notice to Proceed," which will specify the date or dates that the Contractor can start delivery, roadway or stockpile delivery and will also include the completion dates. These dates will be in accordance with the dates shown in the proposal.

Delivery – Additional Requirements

a. The Contractor shall furnish the Missouri Department of Transportation with a planned delivery schedule at least 16 hours before starting delivery.

   1) Notification should be during the normal workday preceding the day on which the Contractor desires to initiate delivery.

   2) It will be necessary for a representative of the Missouri Department of Transportation to be present when the material is delivered.

   3) No material will be accepted that has been dumped in the absence of the department's aggregate materials checker.

b. The following days shall be construed as **official holidays** under the terms of the contract:

January l	New Year's Day
Third Monday in January	Martin Luther King, Jr.’s Birthday
February 12	Lincoln's Birthday
Third Monday in February	Washington's Birthday
May 8	Truman's Birthday
Last Monday in May	Memorial Day
July 4	Independence Day
First Monday in September	Labor Day
Second Monday in October	Columbus Day
November 11	Veteran's Day
Fourth Thursday in November	Thanksgiving Day
December 25	Christmas Day

c. When any of the above **holidays falls** on a **Sunday,** the holiday will be observed on the following **Monday**; when any of the above **holidays falls** on a **Saturday**, the **holiday** will be observed on the immediately preceding **Friday.**

Temporary Suspension of Work

a. The **District Engineer** shall have authority to suspend work wholly or in part for such period or periods as may be deemed necessary when weather or other conditions are such that in the opinion of the engineer, the work may be done at a later time with advantage to the Department or for failure on the part of the Contractor to comply with any of the provisions of the Contract.

b. If the Department suspends the work for its own advantages and not because of the Contractor's failure to comply with the Contract, the Contractor will be allowed an equal number of calendar days after the completion date for the completion of the work. The Department may at its discretion give the Contractor an extension of time for completing the work where the Contractor incurs delays for causes beyond his control.

c. Normal rainfall is not considered a cause qualifying for an extension of time. Claim for extension of time for all causes must be submitted by the Contractor in writing within **30 Days** after the claimed cause for the delay has ceased to exist.

Cancellation of Contract

a. If the Contractor/supplier fails to carry out the performance of the work with sufficient workmen and equipment to insure the completion of the delivery within the time specified or becomes insolvent or is adjudicated a bankrupt or commits any act of bankruptcy or insolvency or allows any final judgment to stand against him for a period of ten (10) days, the Missouri Department of Transportation may give notice in writing by registered mail to the Contractor/supplier and the surety of such delay, neglect or default.

b. If, within ten (10) days after such notice the Contractor/supplier does not proceed to remedy to the satisfaction of the Department's representatives the faults specified in said notice, or the surety does not proceed to take over the deliveries, the Department shall have full power and authority, without impairing the obligation of the Contractor/supplier under the contract or the surety under the bond, to take over the completion of the work and arrange for the shipment of any materials necessary to complete the work and the Contractor/supplier and the surety will be responsible for any additional costs incurred by the Department in obtaining the completion of the deliveries.

Liquidated Damages

a. In the event the successful Contractor fails to deliver the material within the time specified, the Department and the public will sustain damages because of such delay in delivery, the exact extent of which would be difficult to ascertain, and in order to liquidate such damage in advance it is agreed that the **sum of one-hundred dollars ($100.00) per day, per item,** for each assessable calendar day on which the delivery has not been completed, is reasonable and the best estimate which the parties can arrive at as liquidated damages, and it is therefore agreed that said amount will be withheld from payments due the Contractor or otherwise collected from the Contractor as liquidated damages.

b. **Saturdays, Sundays, holidays and days whereas the Department has suspended work** shall not be assessable days.

Environmental Issues

Attention of the bidder is invited to the **Land Reclamation Act, Chapter 444, Laws of 1971, (House Bill 519)** and the necessity for compliance if applicable.

The Contractor shall take necessary precautions and shall schedule and conduct his operations so as to avoid or minimize siltation of streams while removing gravel there from.

Prohibition Of Employment Of Unauthorized Aliens:

a. Pursuant to RSMo 285.530 (1), no business entity or employer shall knowingly employ, hire for employment, or continue to employ an unauthorized alien to perform work within the state of Missouri. As a condition for the award of any contract or grant in excess of five thousand dollars by the state or by any political subdivision of the state to a business entity, or for any business entity receiving a state-administered or subsidized tax credit, tax abatement, or loan from the state, the business entity shall, by sworn affidavit and provision of documentation, affirm its enrollment and participation in a federal work authorization program with respect to the employees working in connection with the contracted services. Every such business entity shall sign an affidavit affirming that it does not knowingly employ any person who is unauthorized alien in connection with the contracted services. [RSMO 285.530 (2)] A copy of the affidavit referenced above is provided within this document.

BID BOND

KNOW ALL MEN BY THESE PRESENTS, that we_____
_____,
as Principal and_____, as Surety are held and firmly bound unto the **STATE OF MISSOURI** (acting by and through the **Missouri Highways and Transportation Commission)** in the penal sum of:
_____ **Dollars ($_____)** to be paid to the **State of Missouri or to the Missouri Highways and Transportation Commission,** to be credited to the State Road Fund, the Principal and Surety binding themselves, their heirs, executors, administrators, successors, and assigns, jointly and severally, firmly by these presents.

Sealed with our seals and dated this _____

THE CONDITION OF THIS OBLIGATION is such that:

WHEREAS, the Principal is submitting herewith a bid to the Missouri Highways and Transportation Commission for furnishing **Guardrail Install** as set out in the proposal to which this bond is attached.

NOW THEREFORE, if the Missouri Highways and Transportation Commission shall accept the bid of the Principal and if said Principal shall properly execute and deliver to the Missouri Highways and Transportation Commission the contract and contract bond in compliance with the requirements of the proposal, the specifications and the provisions of law, to the satisfaction of the Highways and Transportation Commission, then this obligation shall be void and of no effect, otherwise to remain in full force and effect.

In the event the said Principal shall, in the judgment of the Missouri Highways and Transportation Commission, fail to comply with any requirement as set forth in the preceding paragraph, then the State of Missouri acting through the Missouri Highways and Transportation Commission shall immediately and forthwith be entitled to recover the full penal sum above set out, together with court costs, attorney's fees and any other expense of recovery.

(SEAL) _____
Principal

By _____
Signature

(SEAL) _____
Surety

By _____
Attorney-in-Fact

NOTE: This bond must be executed by the PRINCIPAL and by a CORPORATE SURETY authorized to conduct surety business in the State of Missouri.

SIGNATURE AND IDENTITY OF BIDDER

The undersigned states that the correct LEGAL NAME and ADDRESS of (1) the individual Bidder, (2) each partner or joint venture (whether individuals or corporations, and whether doing business under a fictitious name), or (3) the corporation (with the state in which it is incorporated) are shown below; that (if not signing with the intention of binding himself to become the responsible and sole contractor) he is the agent of, and duly authorized in writing to sign for the Bidder or Bidders; and that he is signing and executing this (as indicated in the proper spaces below) as the proposal of a

( ) sole individual ( ) partnership ( ) joint venture

( ) corporation, incorporated under laws of state of _____

Dated _____.

Name of individual, all partners, or joint ventures:	Address of each:
_____	_____
_____	_____
_____	_____
_____	_____
_____	_____
_____	_____

doing business under the name of:

	Address of principal place of business in Missouri
_____	_____
(If using a fictitious name, show this name above in addition to legal names)	
_____	_____
(If a corporation, show its name above)	

ATTEST: (SEAL)

_____	_____
Secretary	Title

(NOTE: If the Bidder is doing business under a FICTITIOUS NAME, the Proposal shall be executed in the legal name of the individual, partners, joint ventures, or corporation, with the legal address shown, and REGISTRATION OF FICTITIOUS NAME filed with the Secretary of
State, as required by Sections 417.200 to 417.230, RS Mo. If the Bidder is a CORPORATION NOT ORGANIZED UNDER THE LAWS OF MISSOURI, it shall procure a CERTIFICATE OF AUTHORITY TO DO BUSINESS IN MISSOURI, as required by Section 351.570 and following, RS Mo. A CERTIFIED COPY of such Registration of Fictitious Name or Certificate of Authority to do Business in Missouri shall be filed with the Missouri Highways and Transportation Commission, as required by the Standard specifications, Sec 102.6.6 and 102.6.7.

ANTI-COLLUSION STATEMENT

STATE OF _____)
) SS.
COUNTY OF _____)

_____

_____being first

duly sworn, deposes and says that he is _____
Title of Person Signing

of _____

_____
Name of Bidder

that all statements made and facts set out in the proposal for the above project are true and correct; and that the bidder (The person, firm, association, or corporation making said bid) has not, either directly or indirectly, entered into any agreement, participated in any collusion, or otherwise taken any action in restraint of free competitive bidding in connection with such bid or any contract which may result from its acceptance.

Affiant further certifies that bidder is not financially interested in, or financially affiliated with, any other bidder for the above project.

By _____

By _____

By _____

Sworn to before me this _____ day of _____, 20____.

_____
Notary Public

My Commission Expires _____

MISSOURI DOMESTIC PRODUCTS PROCUREMENT ACT

The bidder's attention is directed to the Missouri Domestic Products Procurement Act, Sections 34.350 to 34/359, RsMO, which requires all manufactured goods or commodities used or supplied in the performance of this contract or any subcontract to be manufactured or produced in the United States.

Section 34.355, RsMO, requires the vendor or contractor to certify his compliance with Section 34.353 and, if applicable, Section 34.359, RsMO, at the time of bidding **and** prior to payment. Failure to comply with Section 34.353, RsMO, during the performance of the contract **and** to provide certification of compliance prior to payment will result in nonpayment for those goods or commodities.

Section 34.353.2, RsMO, specifies that it does not apply where the total contract is less than Twenty-Five Thousand Dollars ($25,000.00). If your total bid is Twenty-Five Thousand Dollars ($25,000.00) or more, you **must** complete this form as directed below.

Failure to complete and return this document with this bid will cause the State to presume the manufactured goods or products listed in the bid are not manufactured or produced in the United States, and the bid will be evaluated on that basis. Please read the certification appearing below on this form.

[ ] If all the goods or products specified in the attached bid which the bidder proposes to supply to the State shall be manufactured or produced in the "United States" as defined in Section 34.350, RsMO, check the box at left.

[ ] If only one item of any particular goods or products specified in the attached bid is manufactured or produced in the "United States" as defined in Section 34.350, RsMO, check the box at left and list the items (or item number) here:

_____

_____

[ ] If any or all of the goods or products specified in the attached bid which the bidder proposes to supply to the State are **not** manufactured or produced in the "United States" as defined in Section 34.350, RsMO, then: (a) check the box at left; (b) list below, by item (or item number), the country other than the United States where each good or product is manufactured or produced; and (c) check the boxes to the left of the paragraphs below if applicable and list the corresponding items (or item numbers) in the spaces provided.

Item (or item number)	Location Where Item Manufactured or Produced

(attach an additional sheet if necessary)

[ ] The following specified goods or products cannot be manufactured or produced in the United States in sufficient quantities or in time to me the contract specifications. Items (or item numbers): _____

_____

[ ] The following specified goods or products must be treated as manufactured or produced in the United States, in accordance with an existing treaty, law, agreement, or regulation of the United States, including a treaty between the United States and any foreign country regarding export-import restrictions or international trade. Items (or item numbers): _____

_____

CERTIFICATION

By submitting this document, completed as directed above, with a bid, the bidder certifies under penalty of making false declaration (Section 575.060, RsMO) that the information contained in this document if true, correct and complete, and may be relied upon by the State in determining the bidders qualifications under and in compliance with the Missouri Domestic Products Procurement Act.

The bidder's failure to complete and return this document with the bid as directed above will cause the State to presume the manufactured goods or products listed in the bid are not manufactured or produced in the United States, and the bid will be evaluated on that basis pursuant to Section 34.353.3(2), RsMO.

PREFERENCE IN PURCHASING PRODUCTS

DATE: _____

The bidders attention is directed to Section 34.076 RsMO 1986 which gives preference to Missouri corporations, firms, and individuals when letting contracts or purchasing products.

Bids/Quotations received will be evaluated on the basis of this legislation.

All vendors submitting a bid/quotation must furnish <u>ALL</u> information requested below.

FOR CORPORATIONS:

State in which incorporated: _____

FOR OTHERS:

State of domicile: _____

FOR ALL VENDORS:

List address of Missouri offices or places of business:

_____

_____

_____

_____

_____

_____

_____

THIS SECTION MUST BE COMPLETED AND SIGNED:

FIRM NAME: _____

ADDRESS: _____

CITY: _____ **STATE:** _____ **ZIP:** _____

BY (signature required): _____

Federal Tax I.D. #: _____ **if no Federal Tax I.D. # - list Social Security #:** _____

NOTE: For bid/quotation to be considered, the "Preference in Purchasing Products" form must be on file in the General Services (Procurement) Division and must be dated in the current calendar year.

MISSOURI SERVICE-DISABLED VETERAN BUSINESS PREFERENCE

By virtue of statutory authority, RSMo 34.074, a preference will be given all contracts for the performance of any job or service to service-disabled veteran business either doing business as Missouri firms, corporations, or individuals; or which maintain Missouri offices or places of business, when the quality of performance promised is equal or better and the price quoted is the same or less or whenever competing bids, in their entirety, are comparable.

Definitions:

Service-Disabled Veteran is defined as any individual who is disabled as certified by the appropriate federal agency responsible for the administration of veterans' affairs.

Service-Disabled Veteran Business is defined as a business concern:

a. Not less than fifty-one (51) percent of which is owned by one or more service-disabled veterans or, in the case of any publicly owned business, not less than fifty-one (51) percent of the stock of which is owned by one or more service-disabled veterans; and
b. The management and daily business operations of which are controlled by one or more service-disabled veterans.

If an offeror meets the definitions of a service-disabled veteran and a service-disabled veteran business as defined in 34.074 RSMo and is either doing business as a Missouri firm, corporation, or individual; or maintains a Missouri office or place of business, the offeror **must** provide the following with the proposal in order to receive the Missouri service-disabled veteran business preference over a non-Missouri service-disabled veteran business when the quality of performance promised is equal or better and the price quoted is the same or less or whenever competing proposals, in their entirety, are comparable:

a. A copy of a letter from the Department of Veterans Affairs (VA), or a copy of the offeror's discharge paper (DD Form 214, Certificate of Release or Discharge from Active Duty) from the branch of service the offeror was in, stating that the offeror has a service-connected disability rating ranging from 0 to 100% disability; and
b. A completed copy of this exhibit

(NOTE: For ease of evaluation, please attach copy of the above-referenced letter from the VA or a copy of the offeror's discharge paper to this Exhibit.)

By signing below, I certify that I meet the definitions of a service-disabled veteran and a service-disabled veteran business as defined in 34.074 RSMo and that I am either doing business as a Missouri firm, corporation, or individual; or maintain Missouri offices or places of business at the location(s) listed below.

Veteran Information	Business Information
Service-Disabled Veteran's Name, (Please Print)	Service-Disabled Veteran Business Name
Service-Disabled Veteran's Signature	Missouri Address of Service-Disabled Veteran Business

Effective January 1, 2009 and pursuant to Section 285.530(1) RSMo, no business entity or employer shall knowingly employ, hire for employment, or continue to employ an unauthorized alien to perform work within the State of Missouri.

As a condition for the award of any contract in excess of five thousand dollars by the Missouri Highways and Transportation Commission/Missouri Department of Transportation (MoDOT) to a business entity, the business entity shall, by sworn affidavit and provisions of documentation, affirm enrollment and participation in a federal work authorization program with respect to the employees working in connection with the contract. Every such business entity shall sign an affidavit affirming that it does not knowingly employ any person who is an unauthorized alien in connection with the contract.

For vendors that are not already enrolled and participating in a federal work authorization program, E-Verify is an example of this type of program. Acceptable enrollment and participation documentation consists of completed a copy of the E-Verify Memorandum of Understanding (MOU).

Any vendor that is not already enrolled and participating in a federal work authorization program and has the intent of doing business with MoDOT, should begin the enrollment process immediately by going to the web site below:

E-Verify is available at: http://www.dhs.gov/xprevprot/programs/gc_1185221678150.shtm.

A copy of a completed E-Verify Memorandum of Understanding (from the link above) should be returned with your Request For Quotation response along with the appropriate affidavit form.

ADDITIONAL INFORMATION FOR VENDORS:

To begin participation in the federal program it takes approximately 1-2 hours on the internet (at the link above). There is a tutorial of the program and a 50-question test. Once the test is passed, the electronically signed Memorandum of Understanding verifying program participation will be given.

Copies of the Memorandum of Understanding will be requested with all future RFQ's issued by MoDOT District 5. Therefore, It is important that the vendor prints the Memorandum of Understanding and keeps a copy because additional copies must be requested from Homeland Security if needed at a later date.

Only the first and signature pages of the Memorandum Of Understanding have to be attached to the appropriate affidavit on the following pages.

IF YOUR BUSINESS IS A SOLE-PROPRIETORSHIP OR PARTNERSHIP, THIS AFFIDAVIT FORM SHOULD BE COMPLETED AND RETURNED WITH YOUR RESPONSE TO THIS REQUEST FOR QUOTATION.

A fax copy of this document is acceptable with the understanding a hard copy will follow by mail.

APPLICANT AFFIDAVIT FOR SOLE-PROPRIETORSHIP OR PARTNERSHIP

(a separate affidavit is required for each owner and general partner)

STATE OF _____)
) ss
COUNTY OF _____)

On this _____ day of _____, 20_____, before me appeared _____, personally known to me or proved to me on the basis of satisfactory evidence to be the person whose name is subscribed to the within instruments, who being by me duly sworn, deposed as follows:

My name is _____, and I am of sound mind, capable of making this affidavit, and personally certify the facts herein stated, as required by Section 208.009, RSMo, for failure to provide affirmative proof of lawful presence in the United States of America:

I am the _____ of _____, which is applying for a public benefit (grant, contract, and/or loan) administered/provided by the Missouri Highways and Transportation Commission (MHTC), acting by and through the Missouri Department of Transportation (MoDOT).
owner or partner — business name

I am classified by the United States of America as: (check the applicable box)

__ a United States citizen. __ an alien lawfully admitted for permanent residence.

I am aware that Missouri law provides that any person who obtains any public benefit by means of a willfully false statement or representation, or by willful concealment or failure to report any fact or event required to be reported, or by other fraudulent device, shall be guilty of the crime of stealing pursuant to Section 570.030, RSMo, which is a Class C felony for stolen public benefits valued between $500 and $25,000 (punishable by a term of imprisonment not to exceed 7 years and/or a fine not more than $5,000 – Sections 558.011 and 560.011, RSMo), and is a Class B felony for stolen public benefits valued at $25,000 or more (punishable by a term of imprisonment not less than 5 years and not to exceed 15 years – Section 558.011, RSMo).

I recognize that, upon proper submission of this sworn affidavit, I will only be eligible for temporary public benefits until such time as my lawful presence in the United States is determined, or as otherwise provided by Section 208.009, RSMo.

I understand that Missouri law requires MHTC/MoDOT to provide assistance in obtaining appropriate documentation to prove citizenship or lawful presence in the United States, and I agree to submit any requests for such assistance to MHTC/MoDOT in writing.

I acknowledge that I am signing this affidavit as a free act and deed and not under duress.

_____ _____

Affiant Signature — Affiant's Social Security Number or Applicable Federal Identification Number

Subscribed and sworn to before me this _____ day of _____, 20_____.

_____

Notary Public

My commission expires:

IF YOUR BUSINESS IS NOT A SOLE-PROPRIETORSHIP OR PARTNERSHIP, THIS AFFIDAVIT FORM SHOULD BE COMPLETED AND RETURNED WITH YOUR RESPONSE TO THIS REQUEST FOR QUOTATION.

A fax copy of this document is acceptable with the understanding a hard copy will follow by mail.

WORKER ELIGIBILITY VERIFICATION AFFIDAVIT FOR ALL MHTC/MODOT CONTRACT AGREEMENTS IN EXCESS OF $5,000

(for joint ventures, a separate affidavit is required for each business entity)

STATE OF _____)
) ss
COUNTY OF _____)

On this _____ day of _____, 20_____, before me appeared _____, personally known to me or proved to me on the basis of satisfactory evidence to be a person whose name is subscribed to this affidavit, who being by me duly sworn, deposed as follows:

My name is _____, and I am of sound mind, capable of making this affidavit, and personally certify the facts herein stated, as required by Section 285.530, RSMo, to enter into any contract agreement with the state to perform any job, task, employment, labor, personal services, or any other activity for which compensation is provided, expected, or due, including but not limited to all activities conducted by business entities:

I am the _____ of _____, and I am duly authorized, directed, and/or
title business name
empowered to act officially and properly on behalf of this business entity.

I hereby affirm and warrant that the aforementioned business entity is enrolled in a federal work authorization program operated by the United States Department of Homeland Security to verify information of newly hired employees, and the aforementioned business entity shall participate in said program with respect to all employees working in connection to work under the within state contract agreement with the Missouri Highways and Transportation Commission (MHTC). I have attached documentation to this affidavit to evidence enrollment/participation by the aforementioned business entity in a federal work authorization program, as required by Section 285.530, RSMo.

In addition, I hereby affirm and warrant that the aforementioned business entity does not and shall not knowingly employ, in connection to work under the within state contract agreement with MHTC, any alien who does not have the legal right or authorization under federal law to work in the United States, as defined in 8 U.S.C. § 1324a(h)(3).

I am aware and recognize that, unless certain contract and affidavit conditions are satisfied pursuant to Section 285.530, RSMo, the aforementioned business entity may be held liable under Sections 285.525 though 285.550, RSMo, for subcontractors that knowingly employ or continue to employ any unauthorized alien to work within the state of Missouri.

I acknowledge that I am signing this affidavit as a free act and deed of the aforementioned business entity and not under duress.

_____
Affiant Signature

Subscribed and sworn to before me this _____ day of _____, 20_____.

_____
Notary Public

My commission expires:

A = WIDTH AS SPECIFIED IN PLANS.

L = S x W WHEN POSTED SPEED 45 MPH OR GREATER OR WS^2 /60 WHEN POSTED SPEED IS 40 MPH OR LESS.

L = LENGTH OF TAPER IN FEET.

S = OFF PEAK 85 PERCENTILE SPEED IN MPH.

W = OFFSET DISTANCE IN FEET.

DISTANCE (L) SHALL BE EXTENDED AS REQUIRED BY SIGHT DISTANCE CONDITIONS.

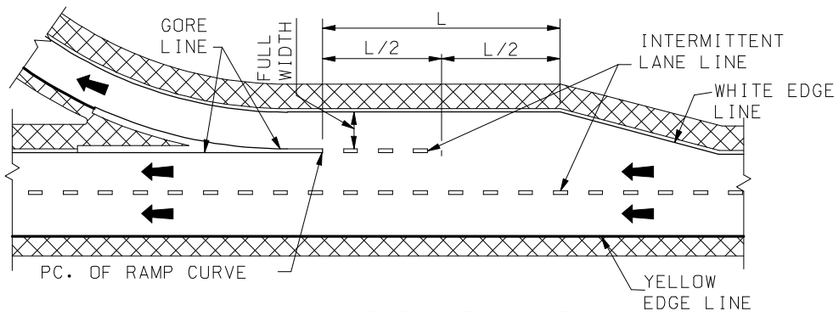

PARALLEL LANE

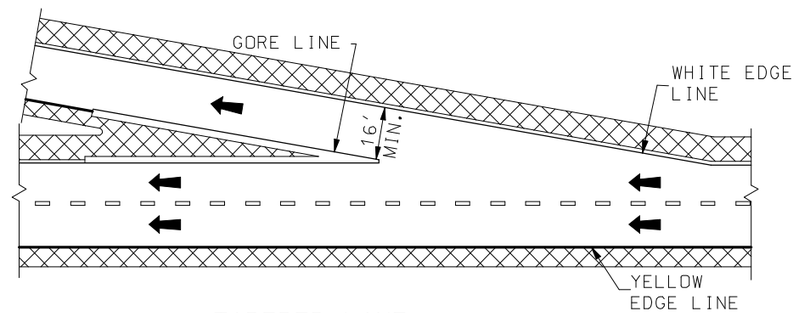

TAPERED LANE

EXIT RAMP MARKING

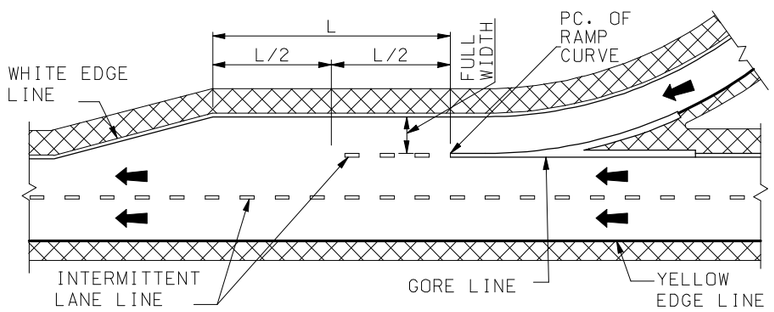

PARALLEL LANE

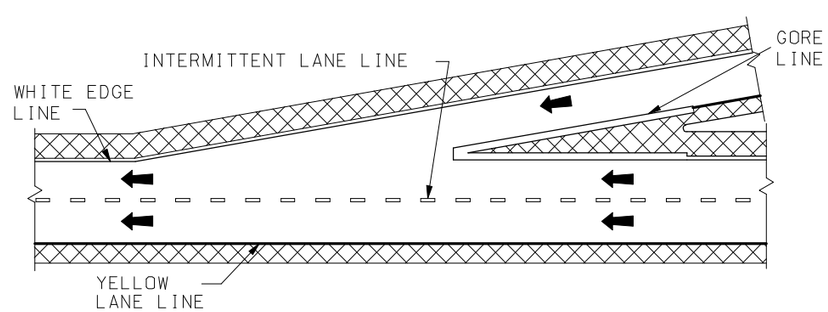

TAPERED LANE

ENTRANCE RAMP MARKING

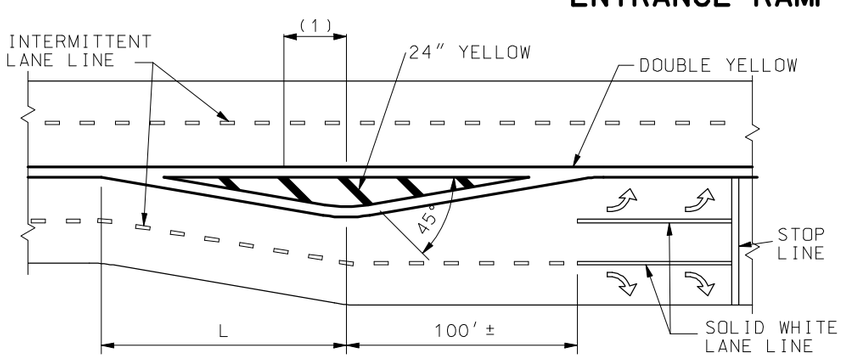

OFFSET ONE LANE

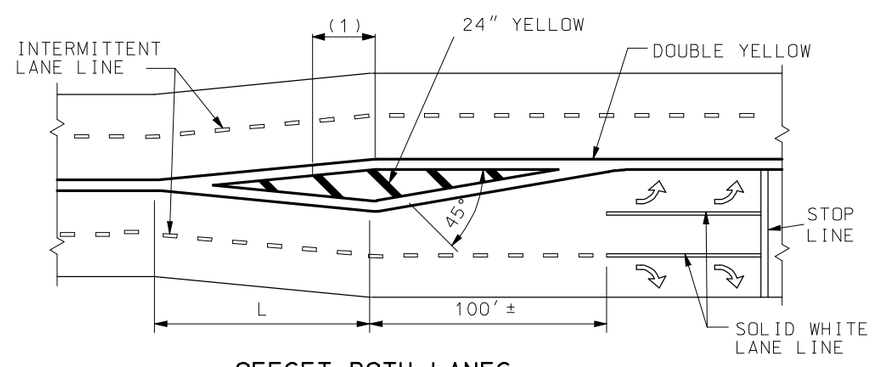

OFFSET BOTH LANES

MEDIAN ISLAND LEFT TURN LANE MARKING

(1) 50' (TYP.) SPACE BETWEEN BARS. A MINIMUM OF 3 BARS ARE REQUIRED. IF NECESSARY, THE DISTANCE BETWEEN THE BARS SHALL BE DECREASED TO INSTALL 3 BARS.

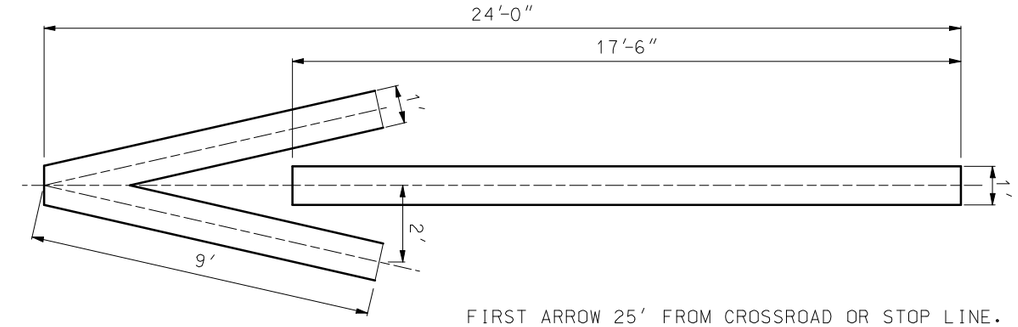

FIRST ARROW 25' FROM CROSSROAD OR STOP LINE.

MAXIMUM 3 ARROWS AT 100' INTERVALS.

ON MULTI-LANE RAMP USE ARROW IN EACH LANE.

WRONG WAY ARROWS ARE NOT USED WHEN RAMP HAS LANE USE CONTROL ARROWS.

OFF RAMP WRONG WAY ARROW

GENERAL NOTES:

REFER TO THE STANDARD PLAN 626.00 WHEN INSTALLING PAVEMENT MARKINGS OVER RUMBLE STRIPS.

LANE LINES SHALL BE AN INTERMITTENT OR SOLID WHITE.

INTERMITTENT LINES SHALL BE 10 FEET IN LENGTH SEPARATED BY 30 FOOT GAPS.

EDGELINES SHALL BE CONTINUOUS SOLID WHITE OR YELLOW LINES. RIGHT SIDE EDGELINES SHALL BE SOLID WHITE. MEDIAN OR LEFT SIDE EDGELINES ON DIVIDED HIGHWAYS AND ON THE LEFT SIDE OF RAMPS SHALL BE SOLID YELLOW. EDGELINES SHALL BE CONTINUOUS ACROSS DRIVEWAYS AND MINOR INTERSECTING ROADS.

"NO PASSING" LINES SHALL BE CONTINUOUS SOLID YELLOW.

"NO PASSING" LINES SHALL BE PLACED AS SHOWN IN "LINE DETAIL". "NO PASSING" LINES ON A TWO-LANE, TWO-WAY HIGHWAY WHEN PASSING IS PROHIBITED IN EACH DIRECTION SHALL BE PLACED 4 INCHES APART AND THE INTERMITTENT CENTERLINE SHALL BE OMITTED.

STOP LINES SHALL BE A SOLID WHITE TRANSVERSE LINE 24 INCHES WIDE, LOCATED AT LEAST 4 FEET FROM THE NEAREST EDGE OF THE INTERSECTING ROADWAY.

CROSSWALK LINES SHALL BE SOLID WHITE TRANSVERSE LINES 6 INCHES WIDE AT LEAST 6 FEET APART. CROSSWALK LINES ON THE INTERSECTION SIDE OF THE CROSSWALK SHALL MEET AT THE CURB.

GORE LINES SHALL BE A SOLID WHITE LINE WITH A WIDTH TWICE THAT OF THE EDGELINE.

ARROWS AND WORD SYMBOLS SHALL BE SOLID WHITE.

MISSOURI HIGHWAYS AND TRANSPORTATION COMMISSION

PAVEMENT MARKING

DATE:_____ | EFFECTIVE: 12-01-2007 | 620.00G | 1/5

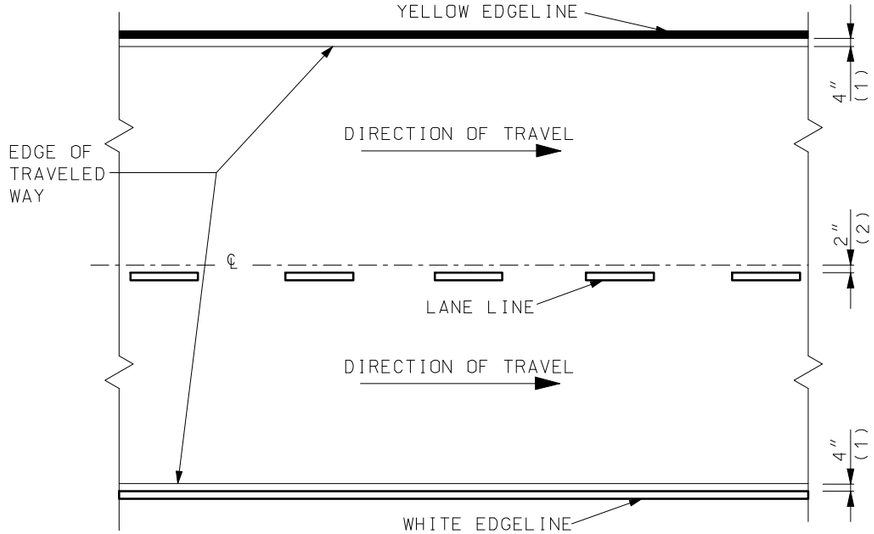

DIVIDED PAVEMENT

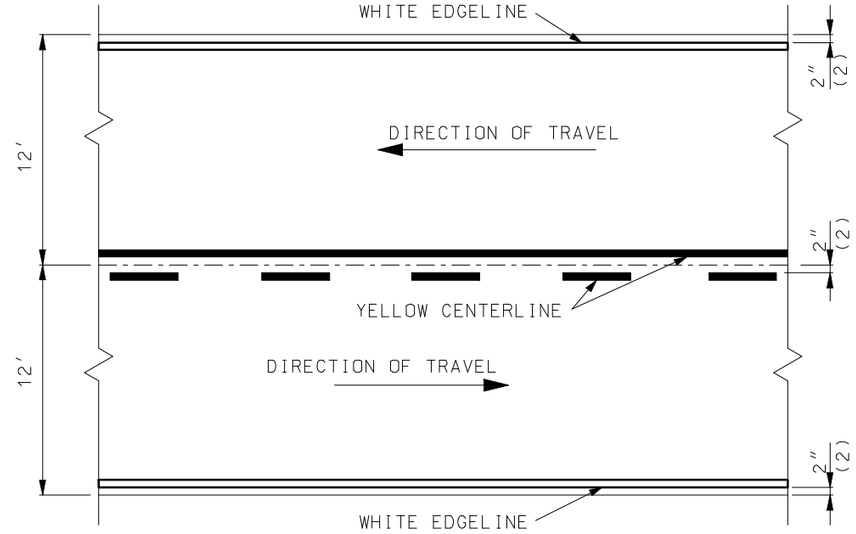

TWO-LANE TWO-WAY

TYPICAL STRIPING OFFSETS WITHOUT RUMBLE STRIPES

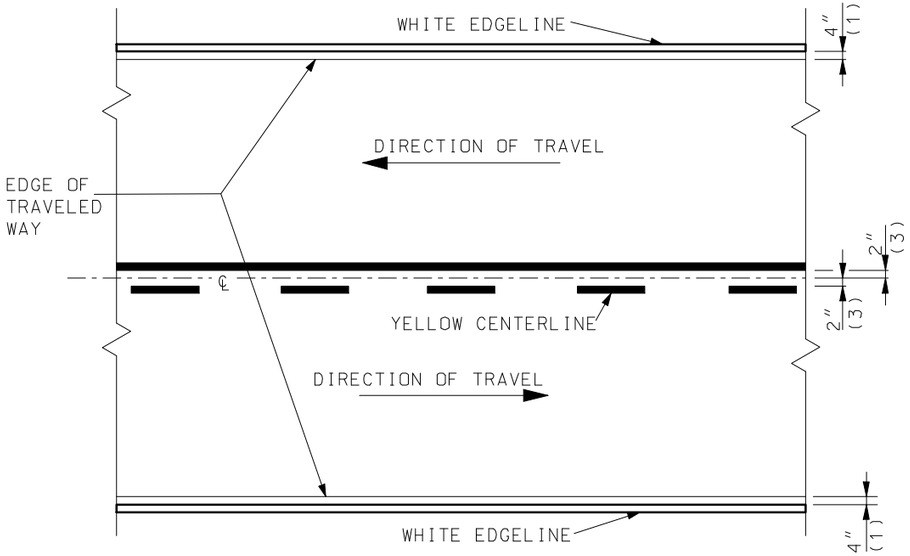

TWO-LANE TWO-WAY

TYPICAL STRIPING OFFSETS FOR RUMBLE STRIPES

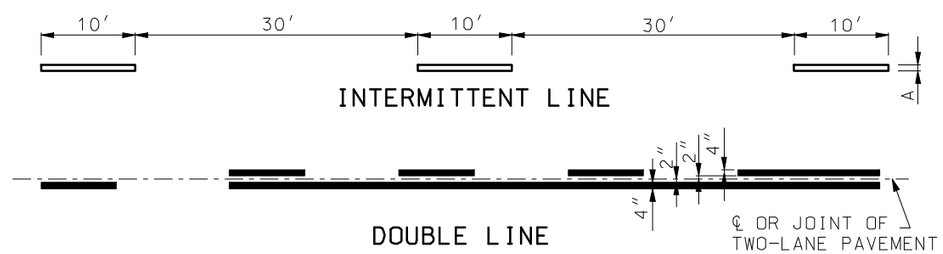

LINE DETAIL

LEGEND
WHITE LINE
YELLOW LINE

(1) OFFSET FROM EDGE OF TRAVELED WAY (TYP.)
(2) OFFSET FROM JOINT (TYP.)
(3) OFFSET FROM CENTERLINE (TYP.)

MISSOURI HIGHWAYS AND TRANSPORTATION COMMISSION			
	PAVEMENT MARKING		
DATE:_____	EFFECTIVE: 12-01-2007	620.00G	2/5

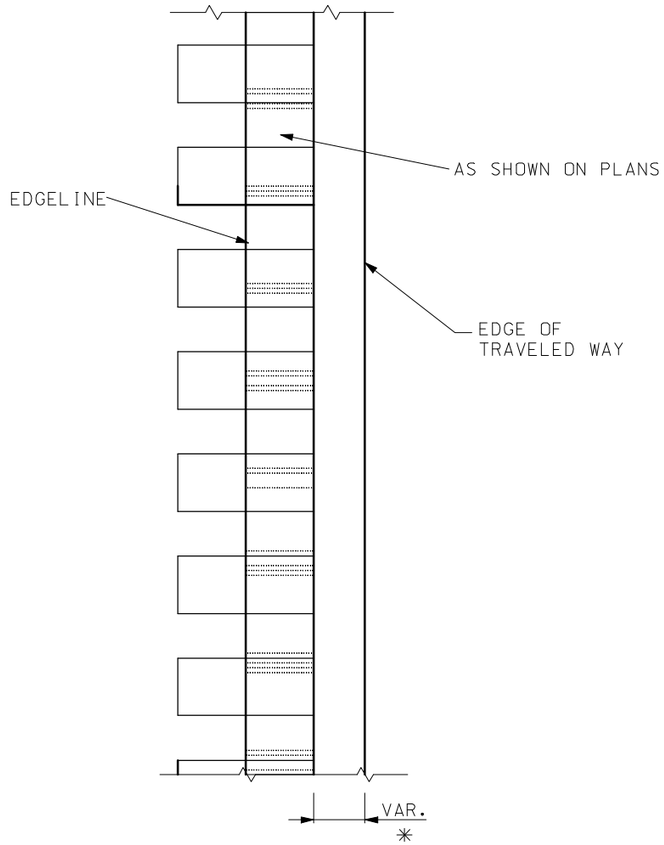

FOR SHOULDERS

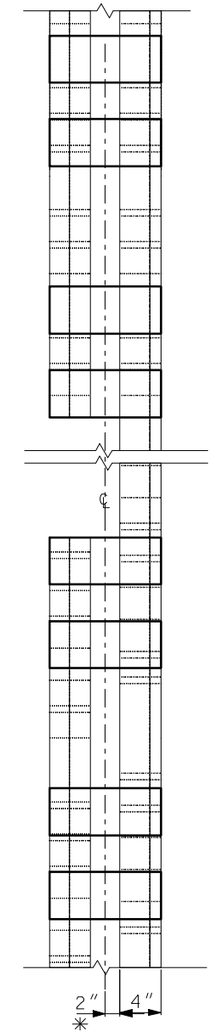

2 WAY 2 LANE

(SEE TYPICAL STRIPING FOR RUMBLESTRIPS)

✳ = LATERAL DEVIATION SHALL NOT EXCEED ONE INCH IN 100 FEET.

MISSOURI HIGHWAYS AND TRANSPORTATION COMMISSION

PAVEMENT MARKING
STRIPING THROUGH RUMBLE STRIPS

DATE:_____ | EFFECTIVE: 12-01-2007 | **620.00G** | 3/5

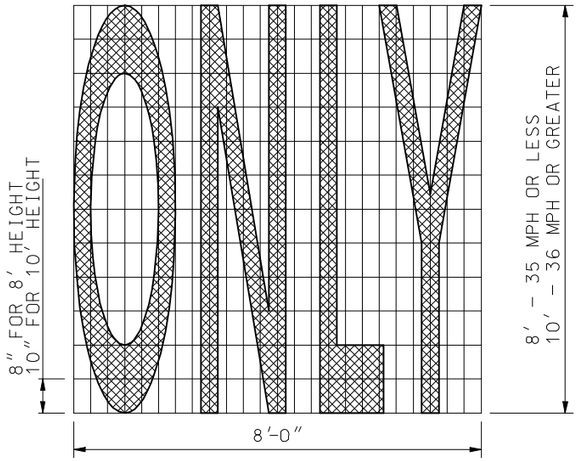

WORD MARKING

ELONGATED WORD & SYMBOL

TWO LANE USE CONTROL ARROWS FOR FIRST 200 FEET WITH ONE ADDITIONAL ARROW EVERY 400 FEET OF MANDATORY MOVEMENT LANE. FIRST ARROW 75 FEET FROM STOP LINE.

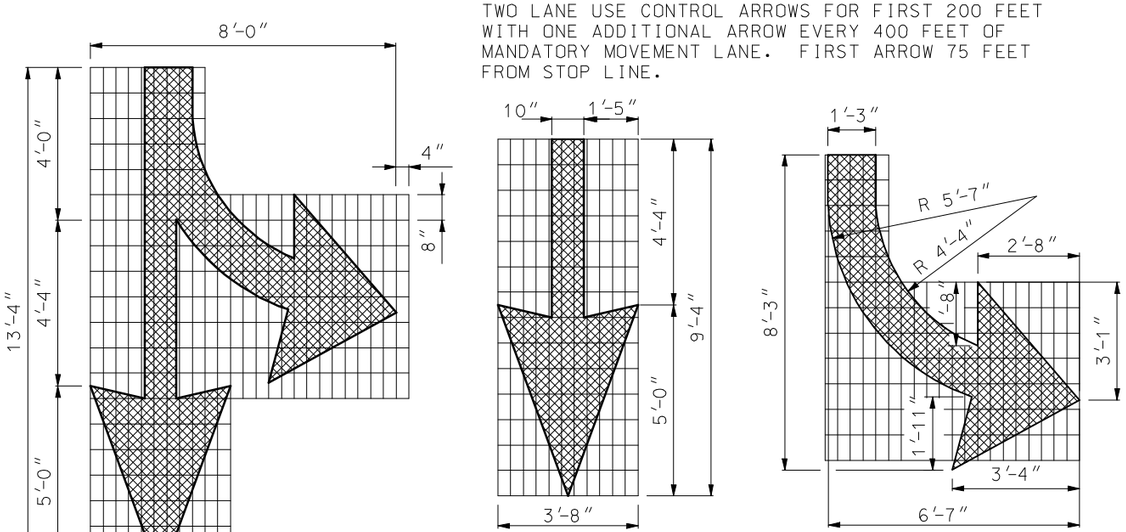

ARROW MARKINGS

L = S × W WHEN POSTED SPEED 45 MPH OR GREATER OR WS^2 /60 WHEN POSTED SPEED IS 40 MPH OR LESS.

L = LENGTH OF TAPER IN FEET.

S = OFF PEAK 85 PERCENTILE SPEED IN MPH.

W = OFFSET DISTANCE IN FEET.

DISTANCE (L) SHALL BE EXTENDED AS REQUIRED BY SIGHT DISTANCE CONDITIONS.

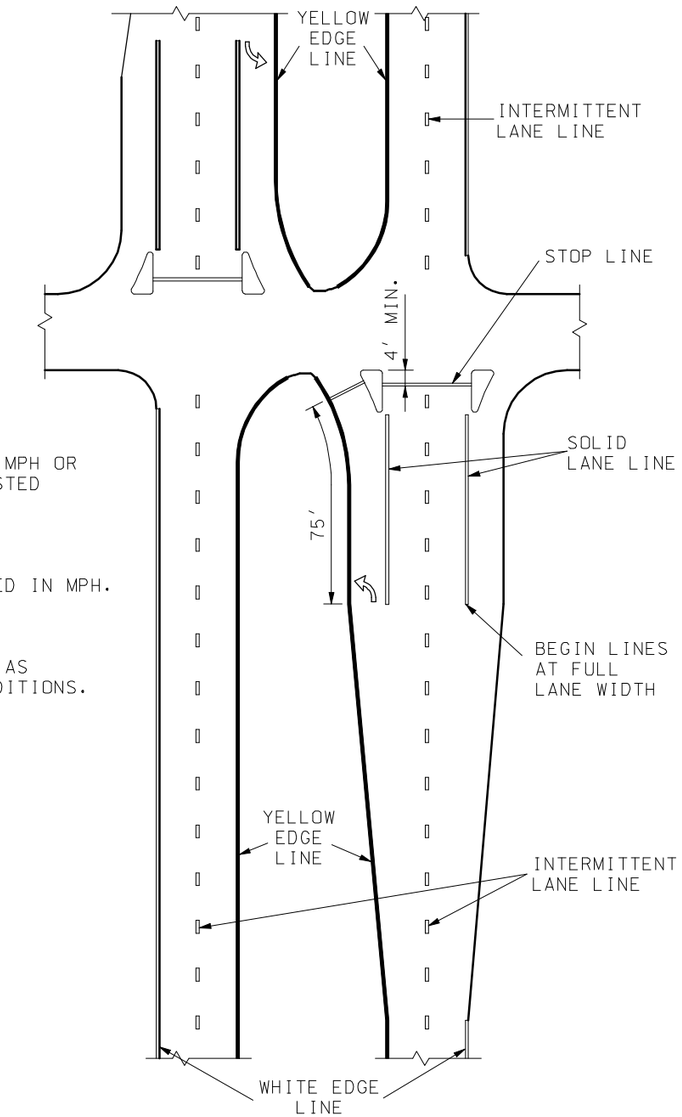

SIGNALIZED GRADE

INTERSECTION MARKING

MISSOURI HIGHWAYS AND TRANSPORTATION COMMISSION			
	PAVEMENT MARKING		
DATE:_____	EFFECTIVE: 12-01-2007	620.00G	4/5

1. STOP LINES SHALL BE PLACED 90° TO THE ROADWAY.
2. IF RAILROAD GATE IS PRESENT THE STOP LINE SHALL BE 8′ FROM GATE.

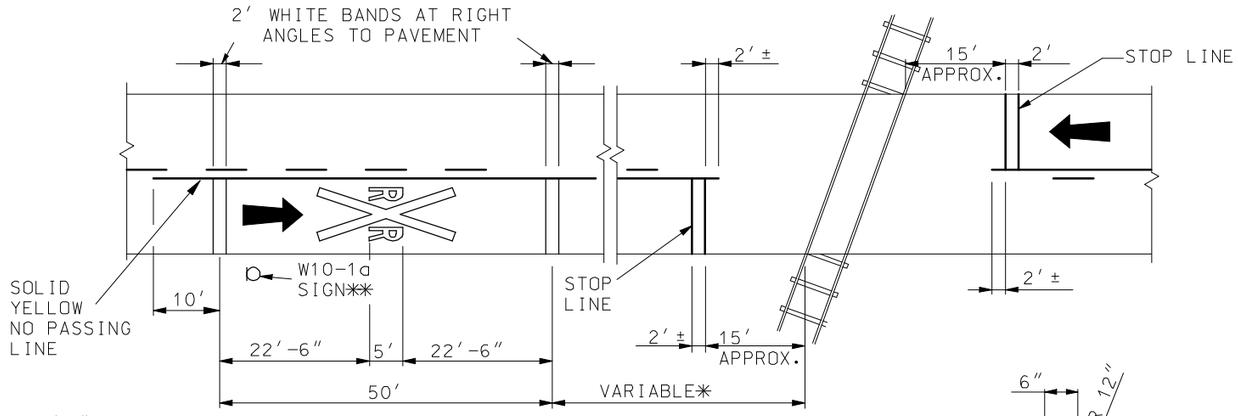

PAVEMENT DETAIL

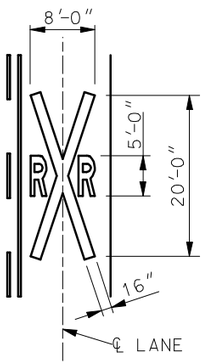

SYMBOL DETAIL

✱ THE DISTANCE FROM THE RAILROAD CROSSING MARKING TO THE NEAREST TRACK WILL VARY ACCORDING TO THE APPROACH SPEED AND THE SIGHT DISTANCE OF THE VEHICULAR TRAFFIC APPROACHING, BUT SHALL BE NO LESS THAN 50 FEET.
A THREE-LANE ROADWAY SHALL BE MARKED WITH A CENTERLINE FOR TWO-LANE APPROACH OPERATION ON THE APPROACH TO A CROSSING. ON MULTI-LANE ROADWAYS THE TRANSVERSE BANDS SHALL EXTEND ACROSS ALL APPROACH LANES, AND INDIVIDUAL "R X R" SYMBLOLS SHALL BE USED IN EACH APPROACH LANE.

✱✱ PLACEMENT OF W10-1a SIGN BY OTHERS.

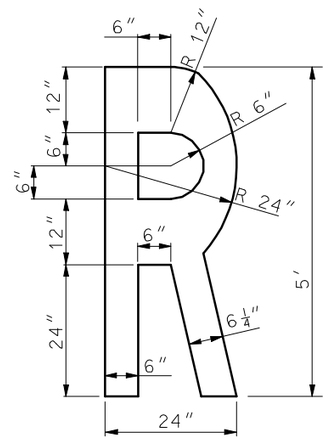

LETTER DETAIL

RAILROAD GRADE CROSSING

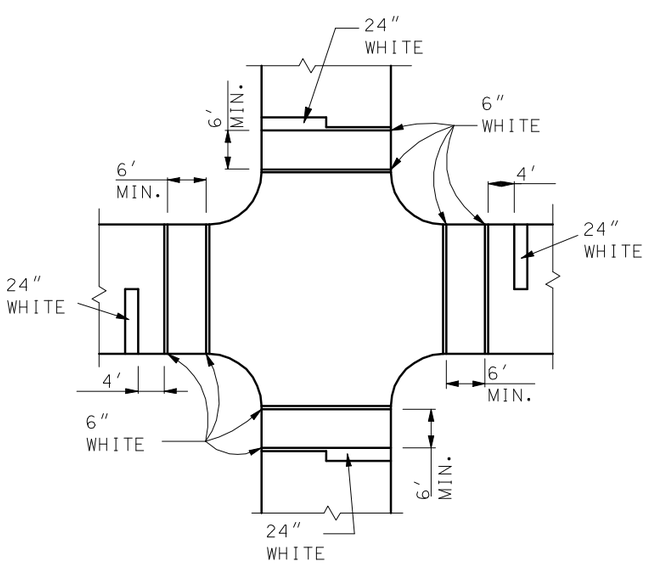

SOLID WHITE
PEDESTRIAN CROSSWALK

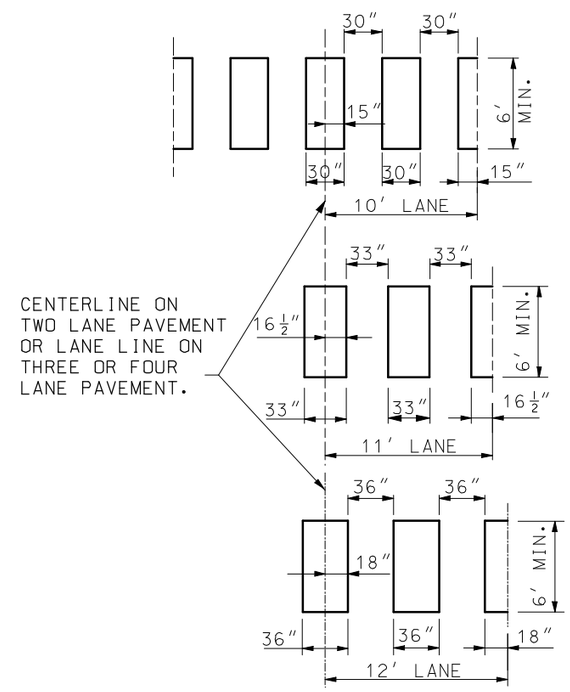

WHITE MIDBLOCK (ZEBRA)

MISSOURI HIGHWAYS AND TRANSPORTATION COMMISSION

PAVEMENT MARKING

DATE:_____ | EFFECTIVE: 12-01-2007 | 620.00G | 5/5