Exhibit 4

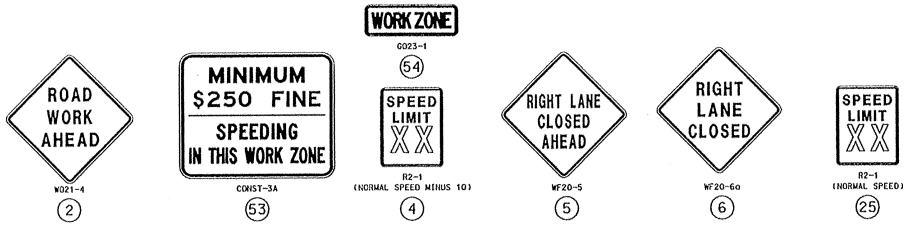

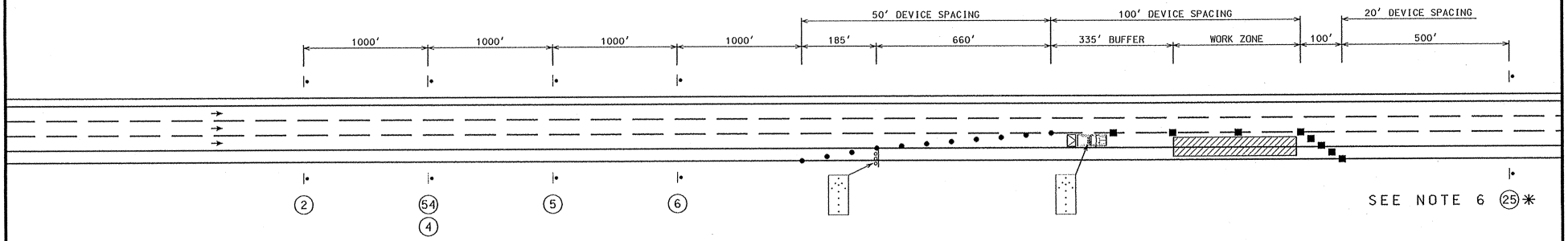

LANE CLOSURE TCP FOR EXISTING 50-55 MPH SPEED ZONE

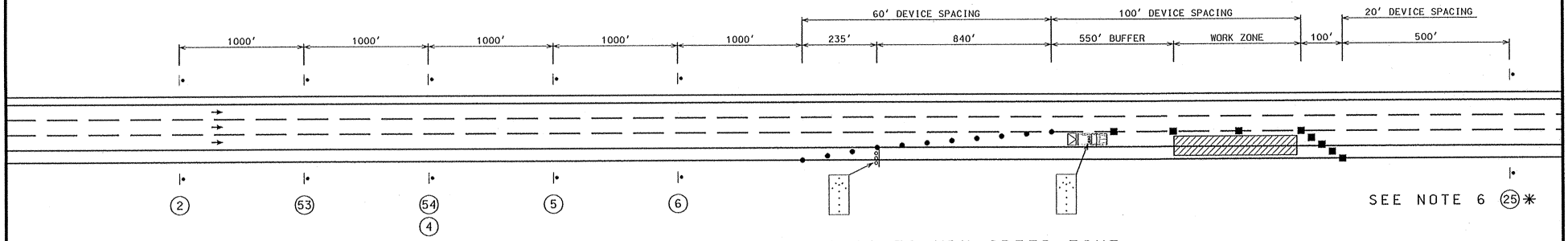

LANE CLOSURE TCP FOR EXISTING 60-70 MPH SPEED ZONE

NOTES:

1. SHOULDER TAPER LENGTH IS SET FOR A STANDARD 10 FOOT SHOULDER. LANE TAPER LENGTH IS SET FOR A STANDARD 12 FOOT LANE WIDTH. IF FIELD CONDITIONS VARY, THE SAME TAPER RATES (NOT DISTANCES) SHALL BE USED.
2. PROTECTIVE VEHICLE WITH TRUCK-MOUNTED ATTENUATOR (TMA) SHALL BE PRESENT DURING ALL TIMES WORK IS BEING PERFORMED WITHIN THE WORK ZONE. A 150-FOOT CLEAR ROLL AHEAD DISTANCE SHALL BE MAINTAINED BETWEEN THE VEHICLE AND THE WORK SPACE.
3. SPEED REDUCTION FOR LANE CLOSURES ON DIVIDED HIGHWAYS SHALL BE THE POSTED SPEED MINUS 10 MPH.
4. EXISTING SPEED LIMIT SIGNS WITHIN THE TEMPORARY TRAFFIC CONTROL ZONE SHALL BE COVERED OR REMOVED.
5. FINE SIGNS SHALL ONLY BE USED ON CLOSURES ON ROADWAYS WITH EXISTING SPEED LIMITS OF 60 MPH OR GREATER, AND WHEN THE CLOSURE IS LONGER THAN 4 HOURS.
6. SPEED LIMIT SIGNS INDICATING THE NORMAL SPEED LIMIT SHOULD BE INSTALLED AT THE END OF THE REDUCED AREA PROVIDED NO OTHER REDUCTION IS IMPOSED WITHIN THE NEXT ½ MILE OR NO EXISTING SPEED LIMIT SIGN IS LOCATED WITHIN THE NEXT ½ MILE.
7. SINCE FINE SIGNS ARE ONLY APPLICABLE WHEN WORKERS ARE PRESENT, THESE SIGNS SHALL BE REMOVED, COVERED, OR TURNED FROM TRAFFIC WHEN THE CONDITION NO LONGER EXISTS.
8. THE CONTRACTOR SHALL INSPECT ALL TEMPORARY TRAFFIC CONTROL DEVICES, AT A MINIMUM, EVERY TWO HOURS THAT THE CLOSURE IS IN EFFECT. ANY VARIANCES FOUND WITH THE PLANS, SHALL BE CORRECTED IMMEDIATELY.
9. CONES SHALL NOT BE USED DURING ANY NIGHT-TIME OPERATION.

TYPICAL
TRAFFIC CONTROL PLAN
SHEET 3 OF 31