Exhibit 5

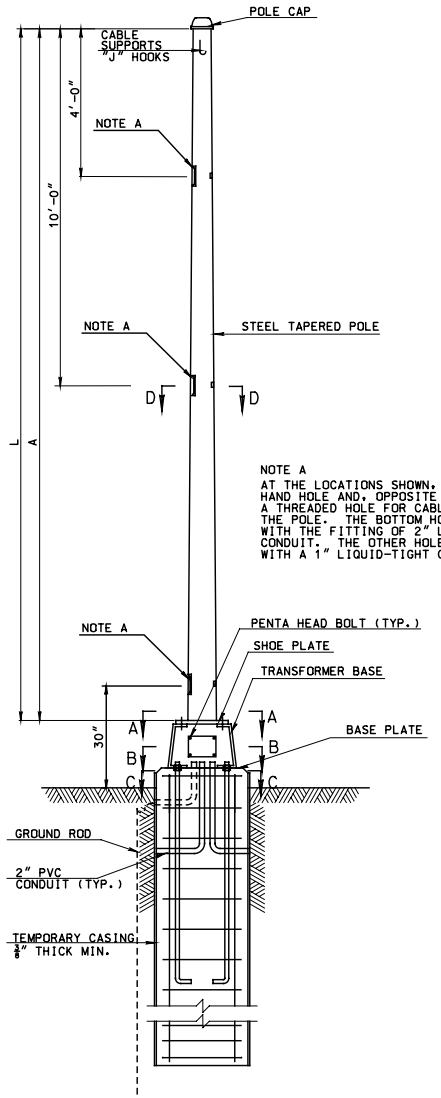

TYPICAL DETECTOR POLE

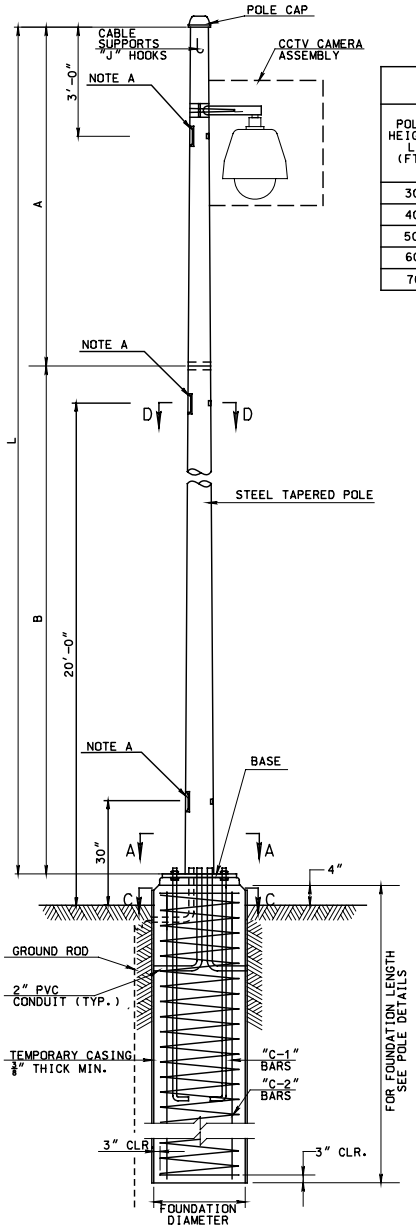

TYPICAL CCTV POLE

POLE TABLE								
POLE HEIGHT L (FT)	A				B			
	DIA. @ TOP	DIA. @ BOT.	THICKNESS	LENGTH (FT)	DIA. @ TOP	DIA. @ BOT.	THICKNESS	LENGTH (FT)
30	6"	8"	¼"	30	–	–	–	–
40	6"	7½"	⅜"	20	7½"	9"	⅜"	20
50	6"	9½"	5/16"	25	9½"	13"	5/16"	25
60	6"	11½"	5/16"	30	11½"	17"	5/16"	30
70	6"	13½"	5/16"	35	13½"	21"	5/16"	35

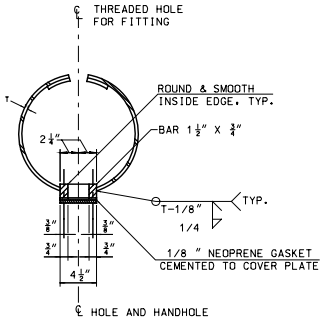

SECTION D-D

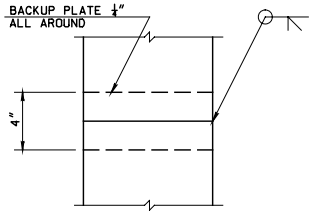

SPLICE DETAIL

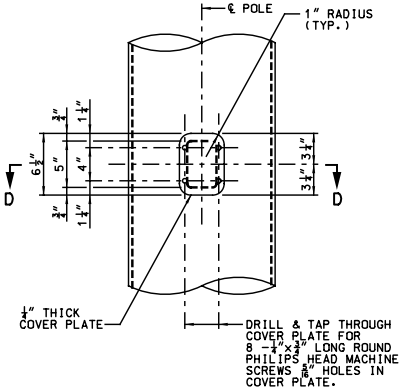

HAND HOLE AND COVER DETAIL

NOTES:

NOTE A
AT THE LOCATIONS SHOWN, PROVIDE A HAND HOLE AND, OPPOSITE THE HAND HOLE A THREADED HOLE FOR CABLES TO ENTER THE POLE. THE BOTTOM HOLE SHALL MATE WITH THE FITTING OF 2" LIQUID TIGHT CONDUIT. THE OTHER HOLE(S) SHALL MATE WITH A 1" LIQUID-TIGHT CORD STRAIN RELIEF

FOR CCTV POLE FOUNDATION DETAILS SEE SHEET 226 - POLE DETAILS.

THE LOCATION OF ERECTION CHANNELS TO BE DETERMINED BY THE MANUFACTURER OF POLE.

FOR SECTIONS A-A, B-B AND C-C SEE SHEET 226 - POLE DETAILS.

FOR ADDITIONAL DETAILS OF DETECTOR POLES AND DETECTOR POLE FOUNDATIONS SEE SHEET 222 - MICROWAVE DETECTOR MOUNTING DETAIL.

TRANSFORMER BASE SHALL BE CERTIFIED AS MEETING THE BREAKAWAY CRITERIA AND STRUCTURAL REQUIREMENTS AS SET BY THE CURRENT "AASHTO STANDARD SPECIFICATIONS FOR STRUCTURAL SUPPORTS FOR HIGHWAY SIGNS, LUMINAIRES AND TRAFFIC SIGNALS."

TEMPORARY STEEL CASING MAY BE REQUIRED IN EACH SHAFT TO PREVENT SOIL COLLAPSE.

ALL CONDUITS AND ANCHOR BOLTS SHALL BE RIGIDLY INSTALLED BEFORE THE CONCRETE IS PLACED. ANCHOR BOLTS SHALL BE SPACED BY MEANS OF A TEMPLATE AT THE TOP OF THE ANCHOR BOLTS. THE CENTER OF WHICH SHALL COINCIDE WITH THE CENTER OF THE FOUNDATION.

HIGH STRENGTH BOLTS, NUTS AND WASHERS SHALL CONFORM TO AASHTO M164 OR HIGH STRENGTH BOLTS CONFORMING TO ASTM A193 AND GRADES B5, B6, B7 OR B16 AND NUTS CONFORMING TO ASTM A194 WILL BE PERMITTED.

ALL ANCHOR BOLTS SHALL BE FULLY GALVANIZED.

DETECTOR AND CCTV POLES AND FOUNDATIONS

REV. -

$FILE$ $TIME$ 17-FEB-2005

CCTV POLE LOCATIONS		
DEVICE BAR CODE	LOCATION	POLE HEIGHT (FT)
MI070W203.9C	I-70 AT HIGHWAY T / HIGHWAY W	60
MI070E205.2C	I-70 EAST OF WEIGH STATION	50
MI070E206.8C	I-70 WEST OF WENTZVILLE PARKWAY	50
MI070E207.5C	I-70 WEST OF WENTZVILLE PARKWAY	50
MI070W208.8C	I-70 EAST OF WENTZVILLE PARKWAY	50
MI070E209.6C	I-70 AT HIGHWAY Z	70
MI070W210.5C	I-70 AT ROUTE 61	60
MI070E212.0C	I-70 AT ROUTE A	70
MI070E214.1C	I-70 AT LAKE ST. LOUIS BLVD	50
MI070E216.1C	I-70 AT BRYAN ROAD	50
MI070E217.9C	I-70 AT MAIN STREET / ROUTE K	60
MI070W219.0C	I-70 AT T. R. HUGHES BLVD	60
MI070W220.5C	I-70 AT SALT LICK ROAD / ROUTE 79	60
MI070W222.2C	I-70 AT MID RIVERS MALL DRIVE	50
MI070W224.8C	I-70 WEST OF CAVE SPRINGS ROAD	50
MI070E226.1C	I-70 EAST OF CAVE SPRINGS ROAD	50
MI070W227.0C	I-70 AT ZUMBHEL ROAD	50
MI070W231.6C	I-70 AT EARTH CITY EXPRESSWAY	60

HNTB

ROUTE	STATE	DISTRICT	SHEET NO.
I-70	MO	6	226

JOB NO. J6I1735

CONTRACT ID

PROJECT NO.

COUNTY ST. CHARLES & ST. LOUIS

DATE 2/10/2005

NOTES:

THE INFORMATION PROVIDED IN THE SCHEDULE OF POLE FOUNDATIONS IS FOR BIDDING PURPOSES ONLY. PRIOR TO COMMENCING CONSTRUCTION, THE CONTRACTOR SHALL SUBMIT TO THE ENGINEER A REQUEST FOR SOIL BORINGS AT EACH FOUNDATION LOCATION. THE ENGINEER WILL USE THE INFORMATION OBTAINED FROM THE SOIL BORINGS TO VERIFY FOUNDATION TYPE, LENGTH AND REINFORCING SHOWN.

FOR LOCATION OF SECTIONS A-A B-B AND C-C SEE SHEET 225 - DETECTOR AND CCTV POLES AND FOUNDATIONS.

INTEGRITY TESTING ON COMPLETED DRILLED SHAFTS FOR POLE FOUNDATIONS WILL NOT BE REQUIRED.

SCHEDULE OF CCTV POLE FOUNDATIONS									
POLE TYPE	POLE HEIGHT (FT)	FOUNDATION LENGTH	FOUNDATION DIAMETER	TYPE "C-1"		*TYPE "C-2"			REMARKS
				NO. & SIZE	LENGTH	NO. & SIZE	RD	LENGTH	
9	30	12'-0"	2'-0"	8-#7	11'-6"	1-#4	1'-6"	67'-1"	IF ROCK IS ENCOUNTERED SHALLOWER THAN FOUNDATION LENGTH, DRILL ROCK SOCKET TO DESIGN DEPTH OR 3 FT, WHICHEVER IS SHALLOWER.
12	40								
15	50	16'-0"	2'-6"	8-#9	15'-6"	1-#4	2'-0"	114'-3"	
18	60	16'-0"	3'-0"	11-#9	15'-6"	1-#4	2'-6"	142'-11"	
21	70	16'-0"	3'-0"	11-#9	15'-6"	1-#4	2'-6"	142'-11"	

*FOUR ANGLE OR CHANNEL SPACERS ARE REQUIRED FOR EACH SPIRAL. SPACERS ARE TO BE PLACED ON INSIDE OF SPIRALS. LENGTH AND WEIGHT OF SPIRALS DO NOT INCLUDE SPLICES OR SPACERS.

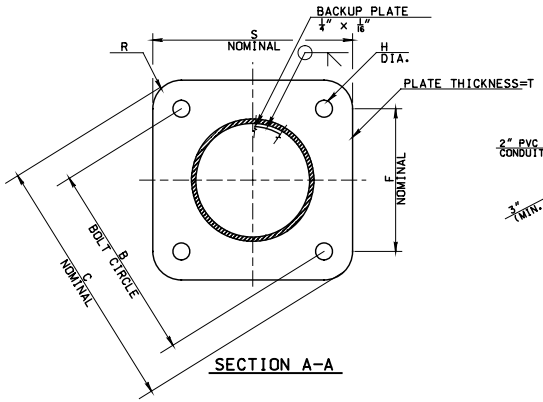

SECTION A-A

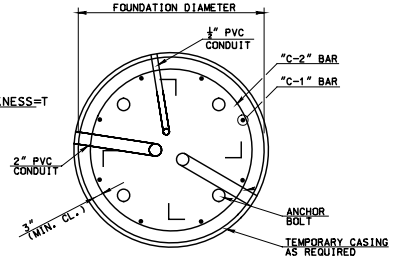

SECTION C-C

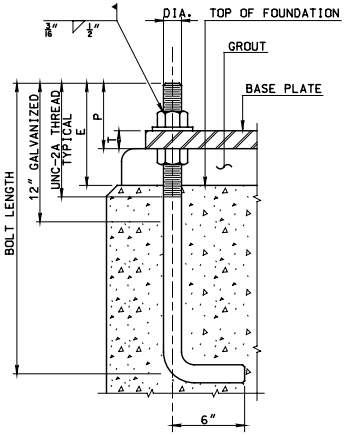

ANCHOR BOLT DETAIL

POLE BASE PLATE ASSEMBLY									
POLE HEIGHT L (FT)	BASE PLATE							ANCHOR BOLTS	
	B	C	F	H	S	R	T	P	SIZE DIA. X LENGTH	E
30	15 1/2"	21 1/2"	11"	1 9/16"	17"	3"	1 3/8"	4"	1 1/4" X 3'-6"	7"
40	15 1/2"	21 1/2"	11"	1 9/16"	17"	3"	1 3/8"	4"	1 1/4" X 3'-6"	7"
50	19 1/2"	25 1/2"	13 3/4"	1 13/16"	19 3/4"	3"	2 1/4"	5"	1 1/2" X 3'-6"	8"
60	23 1/2"	2'-5 1/2"	16 5/8"	1 13/16"	22 5/8"	3"	2 1/2"	5"	1 1/2" X 3'-6"	8"
70	2'-3 1/2"	2'-9 1/2"	19 1/2"	1 13/16"	2'-1 1/2"	3"	2 7/8"	5 1/2"	1 1/2" X 3'-6"	8 1/2"

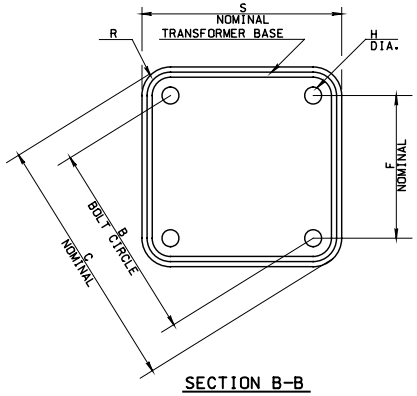

SECTION B-B

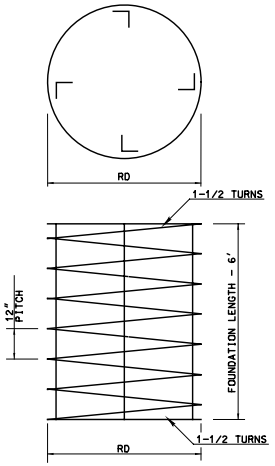

TYPE "C-2" TIE DETAIL

POLE SHOE PLATE ASSEMBLY								
POLE HEIGHT L (FT)	SHOE PLATE							H.S. BOLTS
	B	C	F	H	S	R	T	NO. & SIZE
30	12 1/2"	17 1/2"	8 13/16"	1 3/16"	14"	2 1/2"	1 1/2"	4-1 1/8" ø
40	12 1/2"	17 1/2"	8 13/16"	1 3/16"	14"	2 1/2"	1 1/2"	4-1 1/8" ø

POLE DETAILS

REV. -

$FILE$ $TIME$ 17-FEB-2005