Exhibit 6

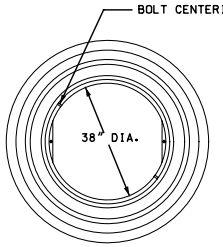

TOP VIEW

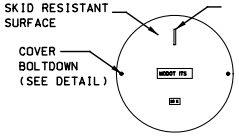

COVER ②

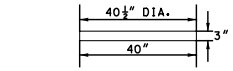

COVER SECTION

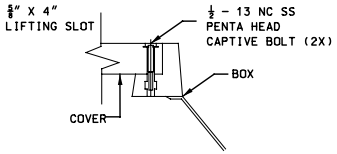

COVER BOLTDOWN DETAIL

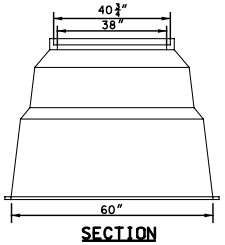

SECTION

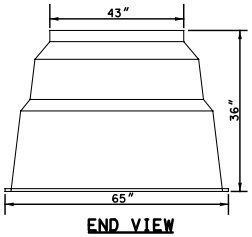

END VIEW

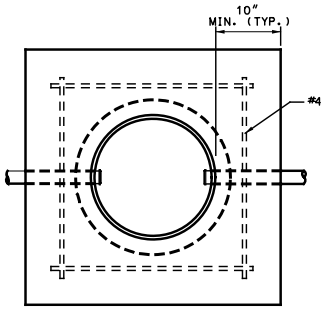

PLAN
PULL BOX GREATER THAN 2'-0" FROM SHOULDER

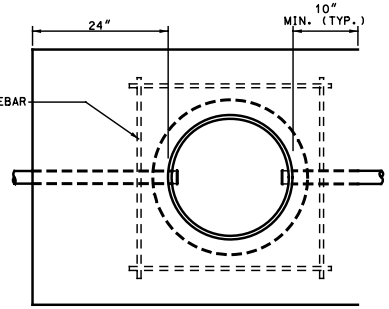

PLAN
PULL BOX ADJACENT TO SHOULDER

NOTES:

1. PULLBOX FRAMES AND COVERS SHALL BE POLYMER CONCRETE.
2. PULLBOX COVERS SHALL HAVE AN APPROVED WHEEL LOAD OF 20,000 LBS AND BE UV STABILIZED.
3. IF SUBSURFACE CONDITIONS EXIST WHICH PROHIBIT THE PLACEMENT OF THE GROUND ROD IN A VERTICAL POSITION, THE ROD MAY BE DRIVEN AT AN OBLIQUE ANGLE NOT TO EXCEED 45 DEGREES FROM VERTICAL OR BURIED IN A TRENCH AT LEAST 30 IN. DEEP. CONNECTION TO GROUND ROD SHALL BE CADWELDED.
4. THE CIRCULAR PULL BOX COVER SHOULD BE SIZED TO FIT A BOX WITH A MINIMUM CLEAR OPENING OF 48".

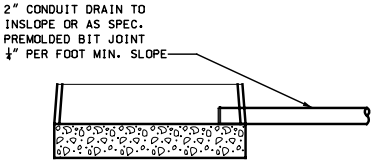

TYPE II DRAIN TYPE
(SEE DRAIN OUTLET DETAILS)
(SECTION ABOVE BREAK APPLICABLE TO TYPE I DRAIN.)

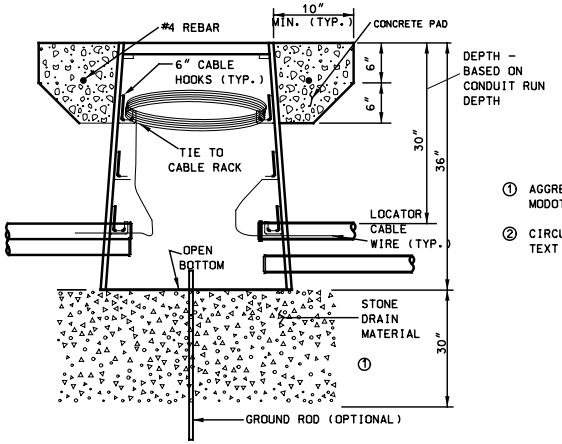

SECTION A-A
TYPE I DRAIN TYPE

① AGGREGATE SHALL CONFORM TO SEC 1007.1, TYPE 1 OF MODOT STANDARD SPECIFICATIONS.

② CIRCULAR PULL BOXES SHALL BE LABELED "MODOT ITS". TEXT SHALL BE 4" IN HEIGHT AND CENTERED.

ITS PULLBOX

REV. -

J:\40610\CADD\Drawings\2-60%\005-ComDetails\088_its_pullbox.dgn 12:53:12 PM 06-APR-2006