Exhibit 7

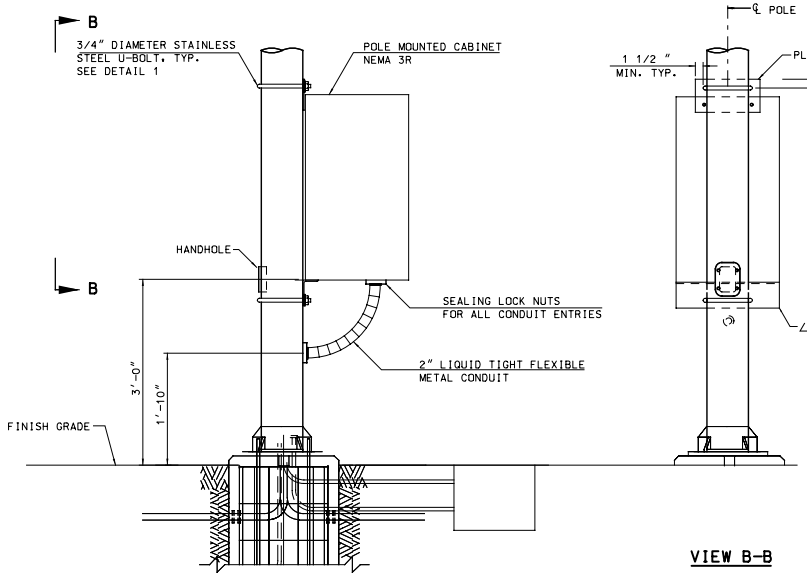


CABINET DETAIL POLE TYPE 15

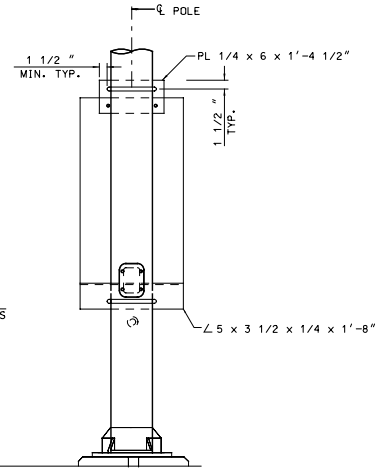


VIEW B-B

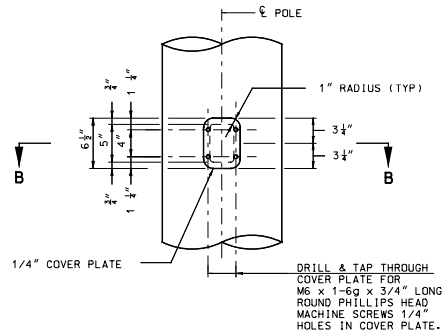


HANDHOLE & COVER DETAIL

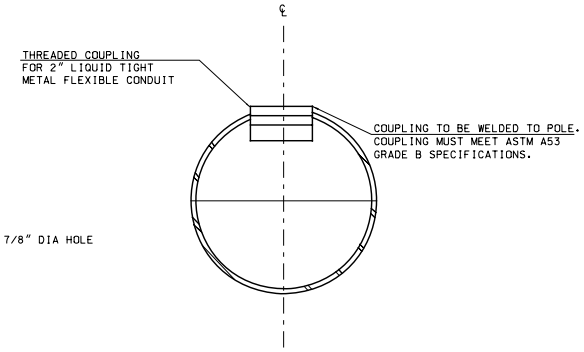


SECTION C-C

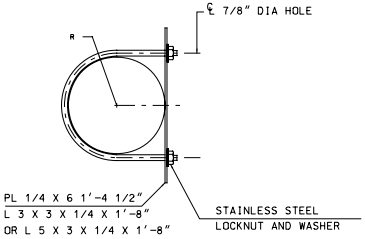


DETAIL 1

TOP CONNECTION SHOWN, BOTTOM SIMILAR

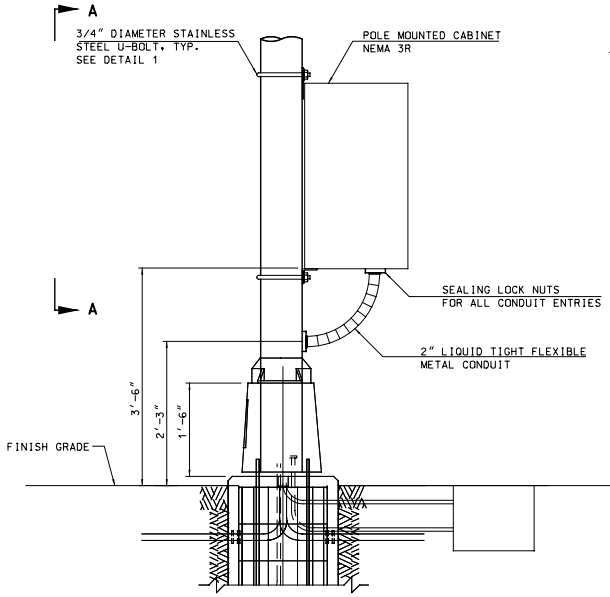


CABINET DETAIL POLE TYPE 9 & 12

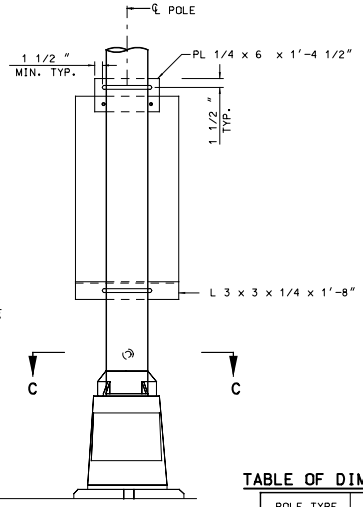


VIEW A-A

TABLE OF DIMENSIONS

| POLE TYPE | R |
|---|---|
| 9 | 4 1/2" |
| 12 | 5" |
| 15 | 6 3/4" |

FIELD TERMINAL CABINET, TYPE 7, INSTALLED ON EXISTING POLE

REV. -

e:\38336\Work\Communications\1817_I-64\Details_050128\XX6_ftcabinet7_instexpole.dgn 3:57:31 PM 28-JAN-2005