MISSOURI DEPARTMENT OF TRANSPORTATION
INFORMAL QUOTE GUIDELINES AND DOCUMENTATION
FOR PURCHASES $3,000 TO $24,999.99
THIS IS NOT AN ORDER

REQUEST FOR INFORMAL QUOTATION

Please quote the lowest prices covering material specified and provide all information requested.

TODAY'S DATE:	SEPTEMBER 9, 2008	QUOTE DUE BY:	1:00 P.M. SEPTEMBER 18, 2008	F.O.B. REQUIREMENTS:	MoDOT 200 HWY. Y AT HWY. 61 JACKSON, MO 63755
DELIVERY DEADLINE:	30-45 DAYS A.R.O.			BUYER NAME /TELEPHONE NUMBER:	RONNIE CLUCK (573) 472-5318
QUOTATION NO:	Q10-09180-RG				
District Mailing Address /Facsimile #:	MoDOT 2675 North Main, Building B Sikeston, Mo. 63801 FAX (573) 472-5890		Delivery Locations:	MoDOT 200 HWY. Y AT HWY. 61 JACKSON, MO 63755	

Quantity	U/M	DESCRIPTION (including size and/or part #'s)	UNIT PRICE	UNIT PRICE EXTENSION	DELIVERY TIME
1	EA	1,850 Gallon Horizontal Salt Brine/Calcium Chloride Storage Tank			
		Tank Shall Comply With Attached Specification.			
		Quote Shall Include Delivery to Location Indicated Above.			
		Certification Of Specification Compliance Shall Be Required Prior To Payment.			
		Quote Shall Remain Current Until October 30, 2008.			
		TOTAL ORDER EXTENSION			

☐ If checked, the following item is a provision of this quotation.

If this quotation is accepted, the quoting firm will be required to comply with the prevailing wages as fixed by the Missouri Department of Labor and Industrial Relations for each affected craft and type of workmen. The current General Wage Order may be inspected at any District Headquarters Office or at the Headquarters Office in Jefferson City.

CONDITIONS AND INSTRUCTIONS

1. All quotations must be submitted on this form and signed with the firm name and by a responsible officer or employee. Obligations assumed by such signature must be fulfilled.
2. Vendor must provide the unit price, unit price extension, delivery time, and total order extension in the spaces provided on page one of this form. Vendor must provide the vendor information in the space provided below.
3. The Missouri Department of Transportation reserves the right to reject any or all quotations, and to accept or reject any items thereon, and to waive technicalities. In case of error in the extension of prices in the quotation, unit prices will govern.
4. By virtue of statutory authority, a preference will be given to materials, products, supplies, provisions and all other articles produced, manufactured, made or grown, within the State of Missouri.
5. Time of delivery is a part of the consideration and evaluation and must be stated in definite terms and must be adhered to. If time varies on different items, the bidder shall so state.
6. If bidding on other than the make, model or brand specified, the manufacturer's name, model number or catalog number must be given and the product offered must be equal to or better than the product requested.
7. The Missouri Department of Transportation is exempt from paying Missouri Sales Tax, Missouri Use Tax and Federal Excise Tax. A Federal Excise Tax Exemption Certificate will be furnished to the successful bidder(s).
8. Informal quotations may be submitted via mail courier, facsimile transmission, or email. The Missouri Department of Transportation is not responsible for any communication failures and the respondent should verify receipt of any and all electronic responses.
9. Suppliers shall give at least 24 hours advance notice of each delivery. Delivery will only be received between the hours of 8:00 a.m. and 3:30 p.m. Monday through Friday. Material arriving after 3:30 p.m. will not be unloaded until the following workday. No material will be received on Saturday, Sunday or observed state holidays.
10. The bidder understands that this project involves state funds and the bidder awarded the contract will be required to comply with the Executive Order 94-03 of the Governor of the State of Missouri dated January 14, 1994. This order stipulates that there shall be no discriminatory employment practices by the contractor or his subcontractors, if any, based on race, color, religion, creed, national origin, sex or age. The undersigned contractor or his subcontractors, if any, shall give written notice of their commitments under this clause to any labor union with which they have bargaining or other agreements.

All responses to this Request for an Informal Quotation MUST be submitted on this form and all pages MUST be returned to the Buyer listed above at the District mailing address shown.

VENDOR NOTES

VENDOR INFORMATION

Vendor Name /Mailing Address		Vendor Contact Information (including area codes):	
		Phone #:	
		Fax #	
		Cellular #	
Printed Name and Title of Responsible Officer or Employee:		Signature:	

PROPRIETARY DATA

PROPERTY OF ACE ROTO-MOLD MFG., INC. INFORMATION FURNISHED HEREIN IS THE PROPERTY OF ACE ROTO-MOLD MFG., INC. AND SHALL NOT BE USED, DISCLOSED TO OTHERS, OR COPIED WITHOUT THE EXPRESSED WRITTEN CONSENT OF ACE ROTO-MOLD MFG., INC. ALL RIGHTS RESERVED.

FS062-HPS

C

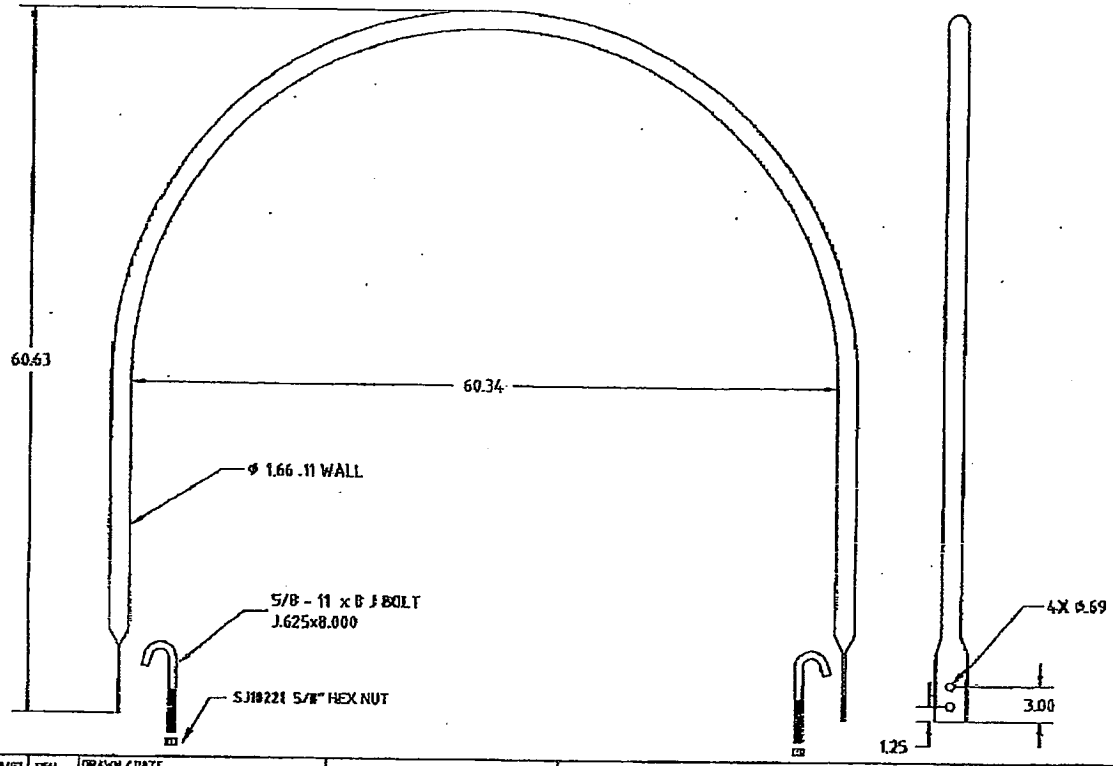

FS062-HP-925 2 HOOPS

FS062-HP-1300 3 HOOPS

FS062-HP-1250 4 HOOPS

FS062-HP-1800C 4 HOOPS
2 WITH CLIPS

FS062-HP-2600C 6 HOOPS
2 WITH CLIPS

REV	DESCRIPTION	DATE	APPRD
C	ADDED 1750 HOOP P.N. CCN1392	8/8/03	REH
B	TOLERANCE WAS 1% @ 68° F	3/16/07	DWC
A	ADD 2ND HOLE FOR J BOLT 6/12/06		

ALL DIMENSIONS ARE IN DECIMAL INCHES
TOLERANCES UNLESS OTHERWISE SPECIFIED
DECIMAL +/- .125"
FRACTION +/- 1/4"
ANGLE +/- 2°

DRAWN / DATE: DHJ/2/21/03

APPRD / DATE: REH/11/8/07

THIRD ANGLE PROJECTION
ANSI Y14.5M

MATERIAL: MILD STEEL 23.5 LBS.

NOTES: BLACK FINISH POWDER COATED

ACE ROTO-MOLD
A DIVISION OF DEN HARTOG INDUSTRIES, INC.
4010 HWY. 68 EL.VD., BOX 421, HOSPERS, IOWA 51238

CLIENT / DESCRIPTION: HOOP FOR Ø62 LEG TANKS

SCALE: NONE

PART NO.: FS062-HPS

PROPRIETARY DATA

PROPERTY OF ACE ROTO-MOLD, INC. [illegible] IS THE PROPERTY OF ACE ROTO-MOLD, INC. [illegible] DISCLOSED TO OTHERS, [illegible] CONSENT OF ACE ROTO-MOLD INC. [illegible]

#	DESCRIPTION	PART NO.
1	2 HOOPS	FS062-HP-925
2	2 HOOPS	FS062-HP-1800C
3	CONECT PLATE	FS-1800-CP
4	SKID	FS1800-SKW
5	2TANKS NO/SUMP	FSA0900-PW / FSB0900-FW

FS1800-2W (A)

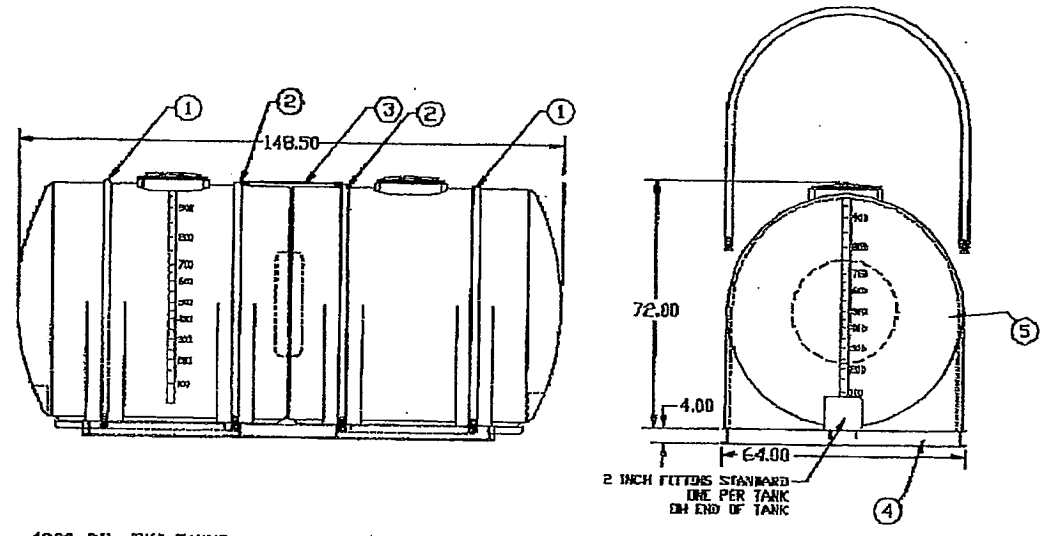

1800 GAL. TWO TANKS

CAUTION: TWO COMPARTMENT TANKS MUST BE PLUMBED TO DRAIN EQUALLY. DO NOT USE TANKS AS INDIVIDUAL STORAGE COMPARTMENTS.

REV	DESCRIPTION	DATE	APPRO
A	TANK WAS FS9925-DW CCN1293	3/19/13	CWC
A	REMOVE TOLERANCE	3/14/13	CWC

ALL DIMENSIONS ARE NOMINAL INCHES
TOLERANCES UNLESS OTHERWISE SPECIFIED

DRAWN / DATE: DEC 11/7/16
APPRO. / DATE: REH 6/11/17

MATERIAL: NONE OR EQUIVALENT REFERENCE MATERIAL DATA SHEET FOR SPECIFIC PROPERTIES.

NOTES:

ACE ROTO-MOLD
A DIVISION OF DEM MARTIN INDUSTRIES, INC.
4018 HWY. 62 BLVD., BOX 421, HOSPERS, IOWA 51238

CLIENT / DESCRIPTION: 1800 GALLON FREE STANDING TANK

SCALE: N.S.

PART NO.: FS1800-2W

PREFERENCE IN PURCHASING PRODUCTS

DATE: _____

The bidders attention is directed to Section 34.076 RSMo 2000 which gives preference to Missouri corporations, firms, and individuals when letting contracts or purchasing products.

Bids/Quotations received will be evaluated on the basis of this legislation.

All vendors submitting a bid/quotation must furnish ALL information requested below.

FOR CORPORATIONS:

State in which incorporated: _____

FOR OTHERS:

State of domicile: _____

FOR ALL VENDORS:

List address of Missouri offices or places of business:

_____

_____

_____

_____

_____

_____

_____

THIS SECTION MUST BE COMPLETED AND SIGNED:

FIRM NAME: _____

ADDRESS: _____

CITY: _____ **STATE:** _____ **ZIP:** _____

BY (signature required): _____

Federal Tax I.D. #: _____ **if no Federal Tax I.D. # - list Social Security #:** _____

NOTE: For bid/quotation to be considered, the "Preference in Purchasing Products" form must be on file in the General Services (Procurement) Division and must be dated in the current calendar year.

MISSOURI DOMESTIC PRODUCTS PROCUREMENT ACT

The bidder's attention is directed to the Missouri Domestic Products Procurement Act, Sections 34.350 to 34/359, RsMO, which requires all manufactured goods or commodities used or supplied in the performance of this contract or any subcontract to be manufactured or produced in the United States.

Section 34.355, RsMO, requires the vendor or contractor to certify his compliance with Section 34.353 and, if applicable, Section 34.359, RsMO, at the time of bidding **and** prior to payment. Failure to comply with Section 34.353, RsMO, during the performance of the contract **and** to provide certification of compliance prior to payment will result in nonpayment for those goods or commodities.

Section 34.353.2, RsMO, specifies that it does not apply where the total contract is less than Twenty-Five Thousand Dollars ($25,000.00). If your total bid is Twenty-Five Thousand Dollars ($25,000.00) or more, you **must** complete this form as directed below.

Failure to complete and return this document with this bid will cause the State to presume the manufactured goods or products listed in the bid are not manufactured or produced in the United States, and the bid will be evaluated on that basis. Please read the certification appearing below on this form.

[ ] If all the goods or products specified in the attached bid which the bidder proposes to supply to the State shall be manufactured or produced in the "United States" as defined in Section 34.350, RsMO, check the box at left.

[ ] If only one item of any particular goods or products specified in the attached bid is manufactured or produced in the "United States" as defined in Section 34.350, RsMO, check the box at left and list the items (or item number) here:

_____

_____

[ ] If any or all of the goods or products specified in the attached bid which the bidder proposes to supply to the State are **not** manufactured or produced in the "United States" as defined in Section 34.350, RsMO, then: (a) check the box at left; (b) list below, by item (or item number), the country other than the United States where each good or product is manufactured or produced; and (c) check the boxes to the left of the paragraphs below if applicable and list the corresponding items (or item numbers) in the spaces provided.

Item (or item number)	Location Where Item Manufactured or Produced

(attach an additional sheet if necessary)

[ ] The following specified goods or products cannot be manufactured or produced in the United States in sufficient quantities or in time to me the contract specifications. Items (or item numbers): _____

_____

[ ] The following specified goods or products must be treated as manufactured or produced in the United States, in accordance with an existing treaty, law, agreement, or regulation of the United States, including a treaty between the United States and any foreign country regarding export-import restrictions or international trade. Items (or item

numbers): _____

_____

CERTIFICATION

By submitting this document, completed as directed above, with a bid, the bidder certifies under penalty of making false declaration (Section 575.060, RsMO) that the information contained in this document if true, correct and complete, and may be relied upon by the State in determining the bidders qualifications under and in compliance with the Missouri Domestic Products Procurement Act.

The bidder's failure to complete and return this document with the bid as directed above will cause the State to presume the manufactured goods or products listed in the bid are not manufactured or produced in the United States, and the bid will be evaluated on that basis pursuant to Section 34.353.3(2), RsMO.

STANDARD SOLICITATION PROVISIONS

a. The Missouri Department of Transportation (MoDOT) reserves the right to reject any or all bids/quotes/proposals, and to accept or reject any items thereon, and to waive technicalities. In case of error in the extension of prices in the bid/quote/proposal, unit prices will govern.

b. All bids/quotes/proposals must be signed with the firm name and by a responsible officer or employee. Obligations assumed by such signature must be fulfilled.

c. By virtue of statutory authority, a preference will be given to materials, products, supplies, provisions and all other articles produced, manufactured, made or grown, within the State of Missouri.

d. Time of delivery is a part of the consideration and, if not otherwise stated in the solicitation documents, must be stated in definite terms by the Bidder/Offeror and must be adhered to. If time varies on different items, the Bidder/Offeror shall so state.

e. If providing bids/quotes/proposals for commodities, the Bidder/Offeror will state brand or make on each item. If bidding or proposing other than the make, model or brand specified, the manufacturer's name, model number or catalog number must be given.

f. **For bids/proposals of $25,000** or more, no bids/proposals by telephone, telegram or telefax will be accepted. If provided, these bids/proposals should be returned in the MoDOT solicitation return envelope.

g. If a solicitation return envelope is provided by MoDOT, the bid/quote/proposal should be returned in the envelope provided with the Bid/RFQ/RFP Request Number plainly indicated thereon.

h. The date specified for the returning of bids/quotes/proposals is a firm deadline and all bids/quotes/proposals must be received at the designated office by that time. The Department does not recognize the U.S. Mail, Railway Express Agency, Air Express, or any other organization, as its agent for purposes of accepting proposals. All proposals arriving at the designated office after the deadline specified will be rejected.

GENERAL TERMS AND CONDITIONS

General Performance

a. This work is to be performed under the general supervision and direction of the Missouri Department of Transportation (MoDOT) and, if awarded any portion of the work, the Contractor agrees to furnish at his own expense all labor and equipment required to complete the work, it being expressly understood that this solicitation is for completed work based upon the price(s) specified and is not a solicitation for rental of equipment or employment of labor by MoDOT, and MoDOT is to have no direction or control over the employees used by the Contractor in performance of the work.

Deliveries

a. Unless otherwise specified on the solicitation documents or purchase order, suppliers shall give at least 24 hours advance notice of each delivery. Delivery will only be received between the hours of 8:00 a.m. to 3:00 p.m., Monday through Friday. Material arriving after 3:00 p.m. will not be unloaded until the following workday. No material will be received on Saturday, Sunday or state holidays.

b. If the prices bid herein include the delivery cost of the material, the Contractor agrees to pay all transportation charges on the material as FOB - Destination. Freight costs must be included in the unit price bid and not listed as a separate line item.

c. Any demurrage is to be paid by the Contractor direct to the railroad or carrier.

Nondiscrimination

a. The Contractor shall comply with the Regulations relative to nondiscrimination in federally-assisted programs of the Department of Transportation, Title 49, Code of Federal Regulations, Part 21, as they may be amended from time to time, (hereinafter referred to as the Regulations), which are herein incorporated by reference and made a part of this contract.

b. All solicitations either by competitive bidding or negotiation made by the Contractor for work to be performed under a subcontract, including procurements of materials or leases of the Contractor's obligations under this contract and the Regulations, will be relative to nondiscrimination on the grounds of race, color, or national origin.

1) Sanctions for Noncompliance: In the event of the Contractor's noncompliance with the nondiscrimination provisions of this contract, MoDOT shall impose such contract sanctions as it or the Federal Highway Administration may determine to be appropriate, including, but not limited to:

   i. withholding of payments to the Contractor under the contract until the Contractor complies, and/or,

   ii. cancellation, termination or suspension of the contract, in whole or in part.

Contract/Purchase Order

a. By submitting a bid/quote/proposal, the Bidder/Offeror agrees to furnish any and all equipment, supplies and/or services specified in the solicitation documents, at the prices quoted, pursuant to all requirements and specifications contained therein.

b. A binding contract shall consist of: (1) the solicitation documents, amendments thereto, and/or Best and Final Offer (BAFO) request(s) with any changes/additions, (2) the Contractor's proposal and/or submitted pricing, and (3) the MHTC's acceptance of the proposal and/or bid by purchase order or post-award contract.

c. A notice of award does not constitute an authorization for shipment of equipment or supplies or a directive to proceed with services. Before providing equipment, supplies and/or services, the Contractor must receive a properly authorized purchase order and/or notice to proceed.

d. The contract expresses the complete agreement of the parties and performance shall be governed solely by the specifications and requirements contained therein. Any change, whether by modification and/or supplementation, must be accomplished by a formal contract amendment signed and approved by and between the duly authorized representative of the Contractor and the duly authorized representative of the MHTC, by a modified purchase order prior to the effective date of such modification. The Contractor expressly and explicitly understands and agrees that no other method and/or no other document, including correspondence, acts, and oral communications by or from any person, shall be used or construed as an amendment or modification.

Subcontracting

a. It is specifically understood that no portion of the material or any interest in the contract, shall be subcontracted, transferred, assigned or otherwise disposed of, except with the written consent of MoDOT. Request for permission to subcontract or otherwise dispose of any part of the work shall be in writing to MoDOT and accompanied by documentation showing that the organization which will perform the work is particularly experienced and equipped for such work.

b. Consent to subcontract or otherwise dispose of any portion of the work shall not be construed to relieve the Contractor of any responsibility for the production and delivery of the contracted work and the completion of the work within the specified time.

c. All payments for work performed by a subcontractor shall be made to the Contractor to whom the contract was awarded and the purchase order issued.

Invoicing and Payment

a. MoDOT is exempt from paying Missouri Sales Tax, Missouri Use Tax and Federal Excise Tax. However, the Contractor may themselves be responsible for the payment of taxes on materials they purchase to fulfill the contract. A Federal Excise Tax Exemption Certificate will be furnished to the successful Bidder/Offeror upon request.

b. Each invoice should be itemized in accordance with items listed on the purchase order and/or contract. The statewide financial management system has been designed to capture certain receipt and payment information. Therefore, each invoice submitted must reference the purchase order number and must be itemized in accordance with items listed on the purchase order. Failure to comply with this requirement may delay processing of invoices for payment.

c. Unless otherwise provided for in the solicitation documents, payment for all equipment, supplies, and/or services required herein shall be made in arrears. The Missouri Highways and Transportation Commission (MHTC) shall not make any advance deposits.

d. The MHTC assumes no obligation for equipment, supplies, and/or services shipped or provided in excess of the quantity ordered. Any authorized quantity is subject to the MHTC's rejection and shall be returned at the Contractor's expense.

e. The MHTC reserves the right to purchase goods and services using the state-purchasing card.

Applicable Laws and Regulations

a. The contract shall be construed according to the laws of the State of Missouri. The Contractor shall comply with all local, state, and federal laws and regulations related to the performance of the contract.

b. The Contractor must be registered and maintain good standing with the Secretary of State of the State of Missouri and other regulatory agencies, as may be required by law or regulations. Prior to the issuance of a purchase order and/or notice to proceed, the Contractor may be required to submit to MoDOT a copy of their current Authority Certificate from the Secretary of State of the State of Missouri.

   1) Prior to the issuance of a purchase order and/or notice to proceed, all **out-of-state** Contractors **providing services** within the state of Missouri must submit to MoDOT a copy of their current Transient Employer Certificate from the Department of Revenue, in addition to a copy of their current Authority Certificate from the Secretary of State of the State of Missouri.

c. The contractor shall only utilize personnel authorized to work in the United States in accordance with applicable federal and state laws and Executive Order 07-13 for work performed in the United States.

c. The exclusive venue for any legal proceeding relating to or arising, out of the contract shall be in the Circuit Court of Cole County, Missouri.

HB600 Compliance

The bidder must be in compliance with the laws regarding conducting business with the State of Missouri. The bidder should ensure they are in good standing with the Missouri Department of Revenue. Prior to award MoDot staff will check with the Missouri Department of Revenue to ensure compliance with the provisions of RsMO 34.040.6 If Necessary a " Certificate of No

Tax Due" may be requested of the successful Bidder. If such a certificate is requested, the Bidder's inability to provide this document will result in his/her bid being rejected.

Preferences

a. In the evaluation of bids/quotes/proposals, preferences shall be applied in accordance with Chapter 34 RSMo. Contractors should apply the same preferences in selecting subcontractors.

b. By virtue of statutory authority, RSMo. 34.076 and 34.350 to 34.359, a preference will be given to materials, products, supplies, provisions and all other articles produced, manufactured, made or grown within the State of Missouri. Such preference shall be given when quality is equal or better and delivered price is the same or less.

1) If attached, the document entitled **"PREFERENCE IN PURCHASING PRODUCTS"** should be completed and returned with the solicitation documents.

2) If attached, the document entitled **"MISSOURI DOMESTIC PRODUCTS PROCUREMENT ACT"** should be completed and returned with the solicitation documents. **Applies if bid is Twenty-Five Thousand Dollars ($25,000.00) or more.**

c. In the event of a tie of low bids, the MHTC reserves the right to establish the method to be used in determining the award

Remedies and Rights

a. No provision in the contract shall be construed, expressly or implied, as a waiver by the MHTC of any existing or future right and/or remedy available by law in the event of any claim by the MHTC of the Contractor's default or breach of contract.

b. The Contractor agrees and understands that the contract shall constitute an assignment by the Contractor to the MHTC of all rights, title and interest in and to all causes of action that the Contractor may have under the antitrust laws of the United States or State of Missouri for which causes of action have accrued or will accrue as the result of or in relation to the particular equipment, supplies, and/or services purchased or produced by the Contractor in the fulfillment of the contract with the MHTC.

c. In the event a Contractor becomes involved in, or is threatened with, litigation with a subcontractor or supplier as a result of such direction, the Contractor may request MoDOT to enter into such litigation to protect the interests of the MHTC, and, in addition, the Contractor may request the United States to enter into such litigation to protect the interests of the United States.

Cancellation of Contract

a. The MHTC may cancel the contract at any time for a material breach of contractual obligations or for convenience by providing the Contractor with written notice of cancellation. Should the MHTC exercise its right to cancel the contract for such reasons, cancellation will become effective upon the date specified in the notice of cancellation sent to the Contractor.

b. If the MHTC cancels the contract for breach, the MHTC reserves the right to obtain the equipment, supplies, and/or services to be provided pursuant to the contract from other sources and upon such terms and in such manner as the MHTC deems appropriate and charge the Contractor for any additional costs incurred thereby.

Bankruptcy or Insolvency

a. Upon filing for any bankruptcy or insolvency proceeding by or against the Contractor, whether voluntary or involuntary, or upon the appointment of a receiver, trustee, or assigned the benefit or creditors, the Contractor must notify MoDOT immediately. Upon learning of any such actions, the MHTC reserves the right, at its sole discretion, to either cancel the contract or affirm the contract and hold the Contractor responsible for damages.

Inventions, Patents, and Copyrights

a. The Contractor shall defend, protect, and hold harmless the MHTC, its officers, agents, and employees against all suits of law or in equity resulting from patent and copyright infringement concerning the Contractor's performance or products produced under the terms of the contract.

Inspection and Acceptance

a. No equipment, supplies, and/or services received by MoDOT pursuant to a contract shall be deemed accepted until MoDOT has had reasonable opportunity to inspect said equipment, supplies, and/or services.

b. All equipment, supplies, and/or services which do not comply with the specifications and/or requirements or which are otherwise unacceptable or defective may be rejected. In addition, all equipment, supplies, and/or services which are discovered to be defective or which do not conform to any warranty of the Contractor upon inspection (or at any later time if the defects contained were not reasonably ascertainable upon the initial inspection) may be rejected.

c. The MHTC reserves the right to return any such rejected shipment at the Contractor's expense for full credit or replacement and to specify a reasonable date by which replacements must be received.

d. The MHTC's right to reject any unacceptable equipment, supplies, and/or services shall not exclude any other legal, equitable or contractual remedies the MHTC may have.

Warranty

a. The Contractor expressly warrants that all equipment, supplies, and/or services provided shall: (1) conform to each and every specification, drawing, sample or other description which was furnished to or adopted by MoDOT, (2) be fit and sufficient for the purpose expressed in the solicitation documents, (3) be merchantable, (4) be of good materials and workmanship, and (5) be free from defect.

b. Such warranty shall survive delivery and shall not be deemed waived either by reason of the MHTC's acceptance of or payment for said equipment, supplies, and/or services.

Status of Independent Contractor

a. The Contractor represents itself to be an independent Contractor offering such services to the general public and shall not represent itself or its employees to be an employee of the MHTC. Therefore, the Contractor shall assume all legal and financial responsibility for taxes, FICA, employee fringe benefits, workers' compensation, employee insurance, minimum wage requirements, overtime, etc., and agrees to indemnify, save and hold the MHTC, its officers, agents and employees harmless from and against any and all losses (including attorney fees) and damage of any kind related to such matters.

Indemnification

a. The Offeror shall defend, indemnify and hold harmless the Commission, including its members and department employees, from any claim or liability whether based on a claim for damages to real or personal property or to a person for any matter relating to or arising out of the Offeror's performance of its obligations under this Agreement.