REVISIONS				
Issue:	DATE	DRWN BY	CHKD	DESCRIPTION OF CHANGE
1	04.10.00	DB	DB	New drawing.
2	07.08.06	DB		FASCIA WIDTH WAS 600mm +0, −10mm.

APERTURE & SERVICES DETAIL.

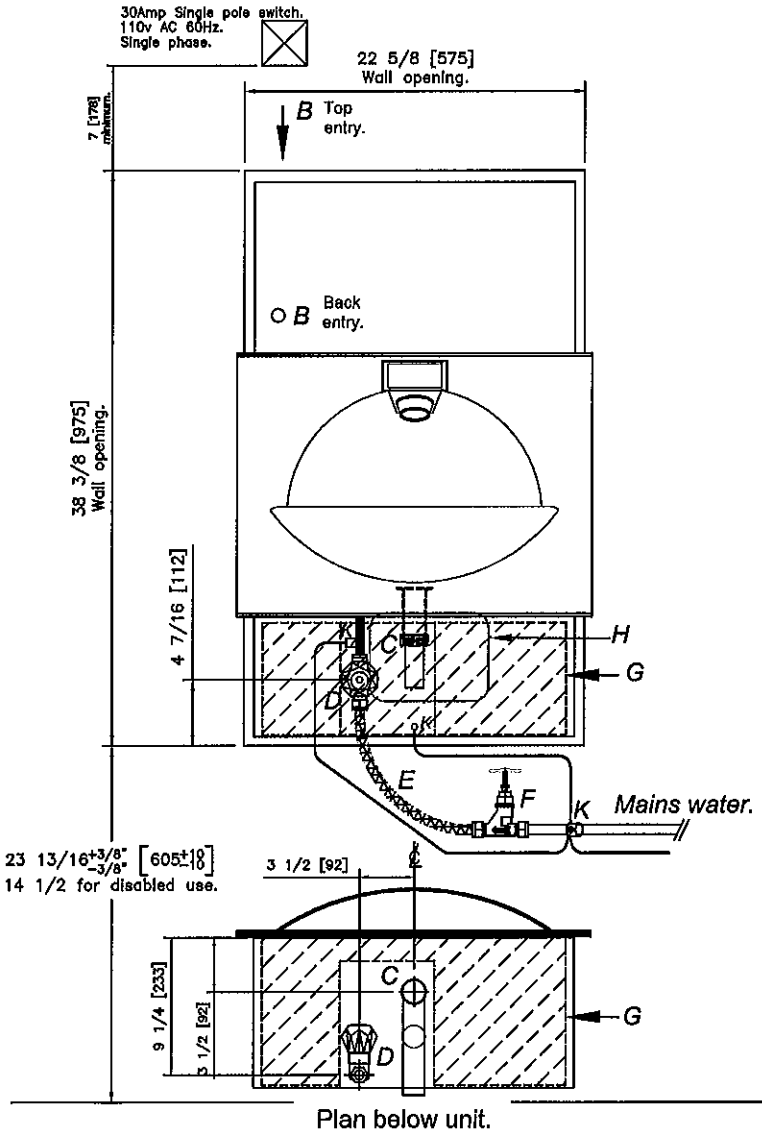

SIDE ELEVATION.

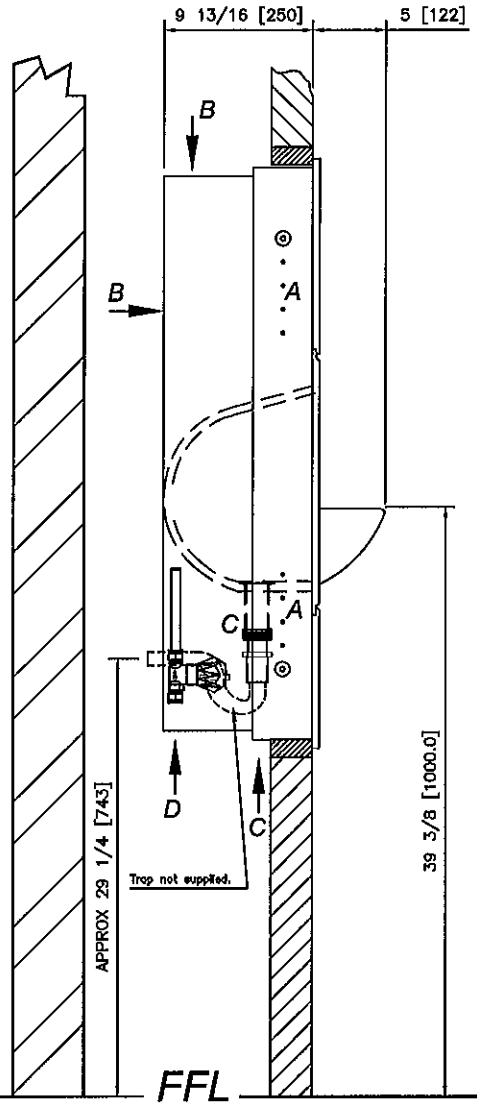

FRONT ELEVATION.

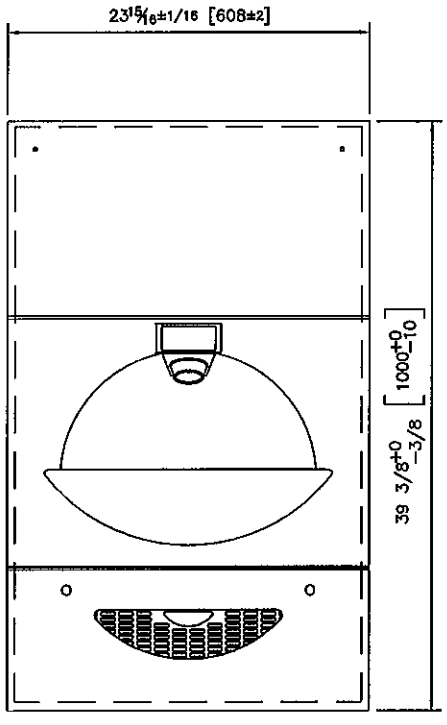

Letter coding:
(A) Sub-frame fixing holes (8 per side).
(B) Electrical cable entry, top or back.
(C) Waste outlet connection with 11/4" trap tail. (Trap not supplied).
(D) Water supply connection ½" NPT.
(E) Flexible braided hose, burst proof, (Not supplied).
(F) Recommended water isolator tap (Not supplied).
(G) Shaded area shows drawer tray of unit that holds the soap tank, which no pipes must obstruct.
(H) Cut out in rear of unit cabinet for waste pipe entry, (8" x 6" high).
(K) Earth bonding points. (Strap on main water pipe not supplied).

WALLGATE LTD.
CROW LANE, WILTON, NR. SALISBURY, WILTS, SP2 0HB.
Tele: 01722 744594. Fax: 01722 742096.

© 1999 COPYRIGHT.
THIS DRAWING IS THE PROPERTY OF WALLGATE LIMITED AND IS ISSUED ON THE STRICT UNDERSTANDING THAT THE INFORMATION CONTAINED WILL NOT BE REPRODUCED, COPIED OR USED WITHOUT THE PRIOR PERMISSION AND AGREEMENT OF WALLGATE LTD.

Title. INSTALLATION DETAILS.

Drg No. INS_CMEA45.

All dimensions are INCHES & (mm).
Limits: +/− 1/16 or as otherwise stated.
All angles 90° (unless stated).
Scale nts.
3rd Angle Projection.