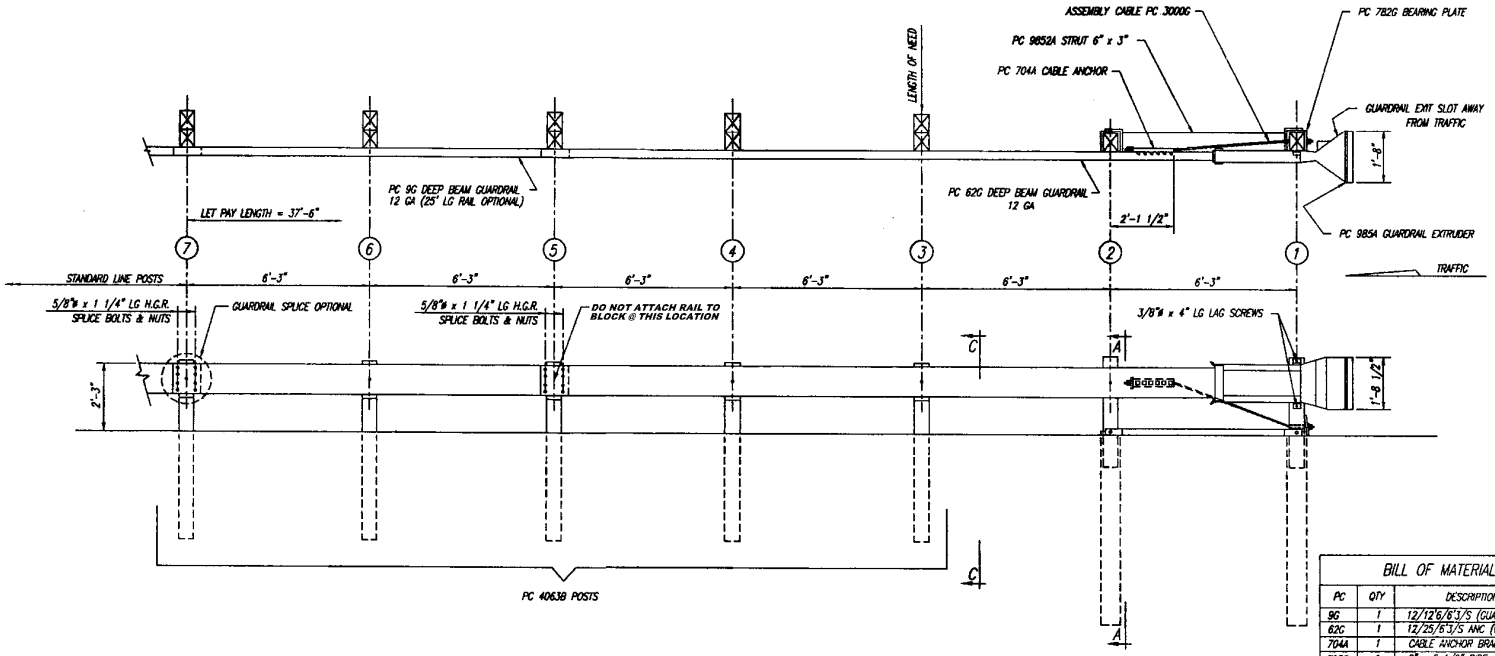

NOTES:
1.) THE 5/8" FLAT WASHER IS USED UNDER THE NUT, BEHIND THE POST ONLY. NO WASHER IS USED AT THE RAIL.
2.) MANUFACTURER SUGGESTS CUSTOMER TO PROVIDE REFLECTORIZATION OF TERMINAL.

BILL OF MATERIAL

PC	QTY	DESCRIPTION
9G	1	12/12'6/6'3/S (GUARDRAIL)
62G	1	12/25/6'3/S ANC (GUARDRAIL)
704A	1	CABLE ANCHOR BRACKET
705G	1	2" x 5 1/2" PIPE
732G	2	6'6 TUBE SLEEVE
782G	1	5/8" x 8" x 8" BEARING PLATE
985A	1	ET-2000 EXTRUDER
3000G	1	CABLE 3/4 x 6'6
3300G	10	5/8" WASHER
3340G	28	5/8" HEX NUT
3360G	16	5/8"ø x 1 1/4" SPLICE BOLT
3478G	4	5/8"ø x 7 1/2" HEX HD BOLT
3497G	2	5/8"ø x 9 1/2" HEX HD BOLT
3500G	1	5/8"ø x 10" POST BOLT
3580G	5	5/8"ø x 18" POST BOLT
3900G	2	1" WASHER
3910G	2	1" HEX NUT
4063B	5	WD 6'0 POST 6 x 8
4075B	5	WD BLOCK 1'2 x 6 x 8 DR
4147B	2	WD 3'9 POST 5 1/2 x 7 1/2
4228C	2	3/8"ø x 4" LAG SCREW
9852A	1	STRUT & YOKE

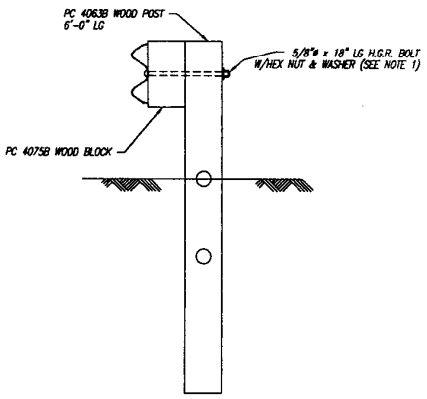

NOTE:
SECTION "C-C" IS SIMILAR @ POST #5 EXCEPT RAIL IS NOT ATTACHED.

SECTION "C-C"
(TYP @ POSTS #3, 4, 5, 6 & 7)

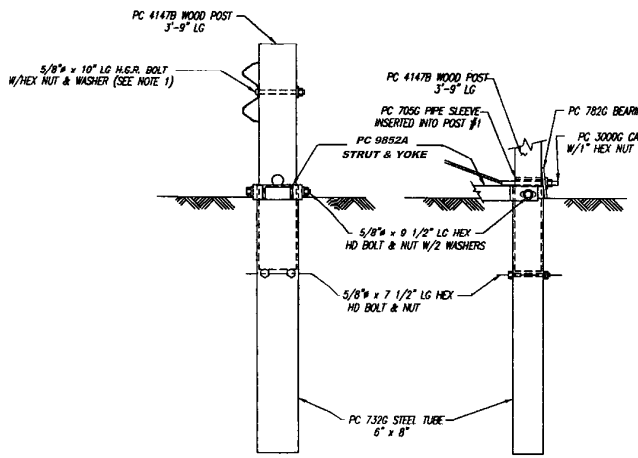

SECTION "A-A"
(@ POST #2)

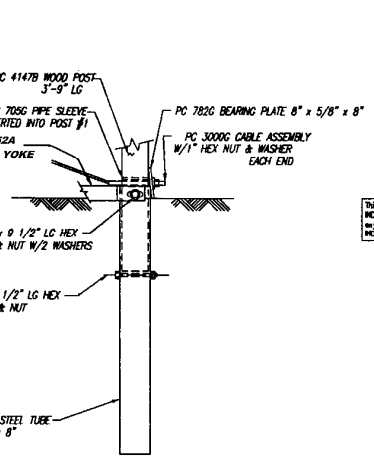

PARTIAL VIEW @ POST #1

This drawing and the information shown thereon is the sole property of TRINITY INDUSTRIES, INC. Neither the drawing nor such information is to be used for any purpose other than that for which it was specifically furnished by TRINITY INDUSTRIES, INC., nor is any reproduction authorized without written permission.

REV.	CHK'D	BY	DATE	REMARKS
1		BT	6-20-97	ADDED PC 3478, CHG QUANTITY PC 3340

SYRO ET2000-LET

ET2000 - LET
PLAN, ELEVATION & SECTIONS

CUSTOMER | P.O. No.

DRAWN B.I.
CHECKED
APPROVED
DATE 12-20-96
ENG. FILE # SS260
SHT.No. E1 OF 1
DRAWING No. SS 260 REV. 1

TRINITY INDUSTRIES, INC.
DALLAS, TX CENTERVILLE, UT GIRARD, OH LIMA, OH FORT WORTH, TX ELIZABETHTOWN, KY