TEMPORARY GROUND-MOUNTED SIGN STAND (MGS-06-01B)

1.0 DESCRIPTION. This specification covers temporary ground-mounted sign stands.

2.0 GENERAL. The temporary ground-mounted sign stands shall consist of two components: a base and a one-bolt sign clamp. The base shall consist of a square steel perforated post and an anchor system. The temporary ground-mounted sign stand shall conform to the specific grades of steel and dimensions, located in this specification and accompanying drawing.

3.0 MATERIALS. The anchor system and the one-bolt sign clamp shall be manufactured in accordance, of temporary ground-mounted sign stand drawing.

3.1 SQUARE STEEL PERFORATED POSTS. The square steel perforated post steel shall be in accordance with the standard specification for hot rolled carbon sheet steel, structural quality, ASTM A 1011, Grade 50. The average minimum yield strength after cold forming shall be a minimum of 50,000 psi.

3. 2 COATING. The posts shall be hot-dipped galvanized steel in accordance with ASTM A 653, G90, structural quality, Grade 50, Class 1. The weld area shall be zinc coated after scarfing operation. The steel shall also be coated with a chromate conversion coating and a clear organic polymer topcoat. Both the interior and the exterior of the post shall be galvanized.

3.3 DIMENSIONAL TOLERANCES. All dimensional tolerances shall be in accordance with ASTM A 513, excepted as noted.

Size	U.S.S. Gauge
1 ¼" x 1 ¼"	12

3.4 CROSS SECTION. The cross section of the post shall be square tube formed of 12 gauge (0.105 U.S.S gauge) steel, carefully rolled to size and shall be welded directly in the corner by high frequency resistance welding and externally scarfed to agree with corner radii.

3.5 HOLE PUNCHING. All holes shall be 11/32 ±1/64 inches in diameter on one (1) inch centers on all four sides down the entire length of the post. The holes shall be on the centerline of each side in true alignment and opposite each other directly and diagonally.

3.6 FINISHED PROPERTIES. The finished posts shall be straight and have a smooth, uniform finish. All holes and ends shall be free from burrs and ends shall be cut square.

4.0 DESIGN. The base shall consist of a square steel perforated post and an anchor system. The anchor system shall consist of a steel rod, a soil plate, and a washer. The soil plate shall be welded to both sides of the steel rod. The soil plate and steel rod welding shall extend the length of the soil plate and rod connection. The washer shall be welded to the steel rod and to the top of the attached soil plate. The square steel perforated post shall be welded to the top of the anchor's washer. The square steel perforated post shall be welded to the steel rod at a location two holes up from the

square steel perforated post connection to the anchor's washer. All four holes shall be filled with weld to the steel rod. The welded holes shall be ground smooth.

4.1 ONE-BOLT SIGN CLAMP. The bolt shall be inserted through a hole located in the center of the U-shape clamp. The bolt head shall be tack welded in two locations to the U-shape steel piece.

5.0 CERTIFICATION. The fabricator shall furnish to the engineer, a certification stating that the temporary ground-mounted sign stands furnished comply with all requirements of this specification. The certification shall include or have attached specific results of tests of the mechanical and chemical properties of the steel conforming to section 3.1 and 3.2 of this specification. The certification for each shipment shall accompany the material to the destination.

6.0 INSPECTION. The material will be inspected at the source or at the destination as determined by the engineer.

7.0 ACCEPTANCE. The temporary ground-mounted sign stands shall be accepted under this specification based upon appropriate certification and upon inspection by the engineer.

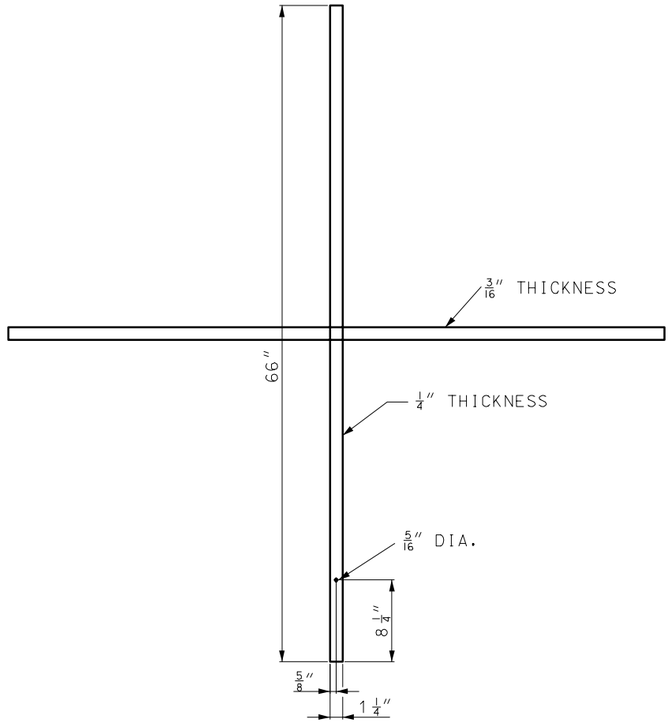

CROSSBAR

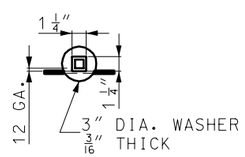

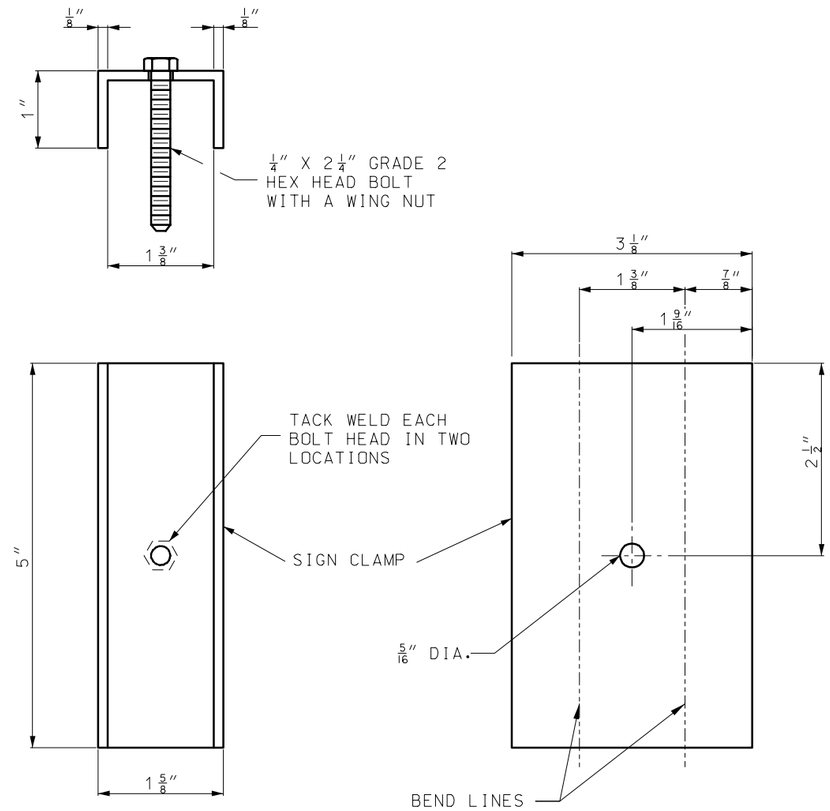

ONE-BOLT SIGN CLAMP

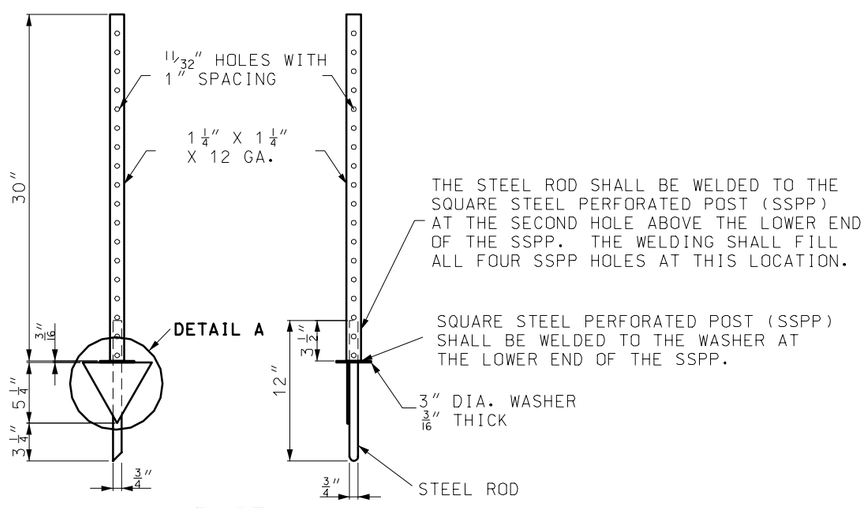

BASE

SQUARE STEEL PERFORATED POST

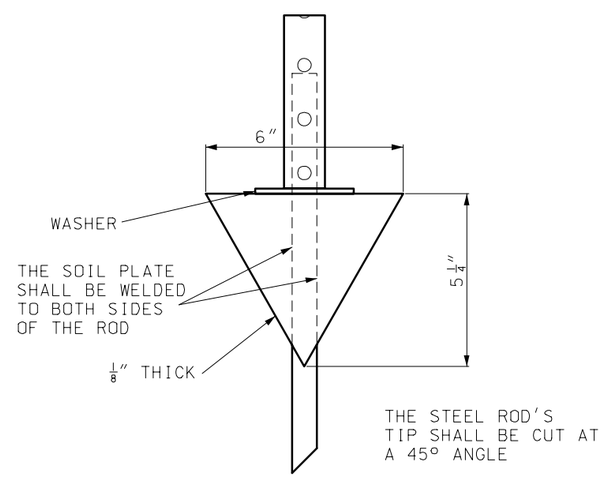

DETAIL A
ANCHOR SYSTEM

GENERAL NOTES:

THE BOLT SHALL BE IN ACCORDANCE WITH ASTM 307 GRADE A. THE WING NUT SHALL BE IN ACCORDANCE WITH ASTM A194 AND SUITABLE TO THE CORRESPONDING BOLT.

THE ANCHOR SYSTEM COMPONENTS SHALL CONSIST OF ASTM A36 STEEL.

THE SIGN CLAMP SHALL CONSIST OF ASTM A36 STEEL.

MISSOURI HIGHWAYS AND TRANSPORTATION COMMISSION

TEMPORARY GROUND-MOUNTED SIGN STAND

DATE:_____ EFFECTIVE: 01-20-2006 **SPECIAL SHEET** 1/1