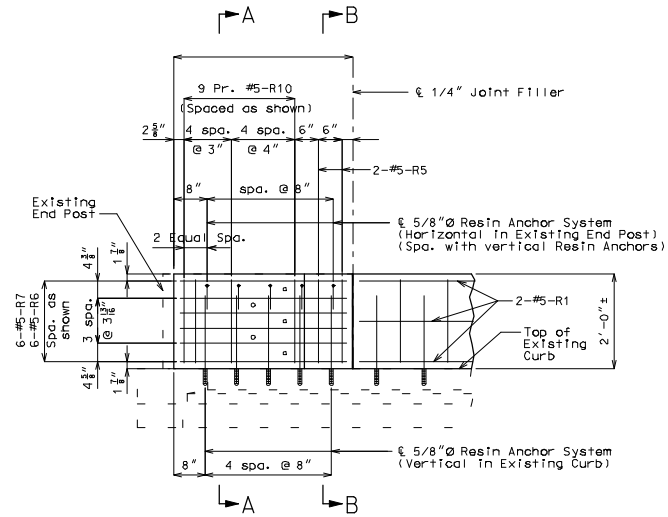

PART SECTION NEAR END POST

END BENT NO. (LEFT SHOWN)
END BENT NO. (RIGHT SIMILAR)

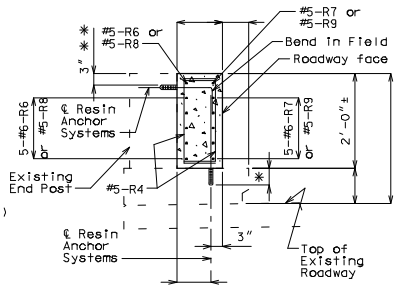

SECTION A-A

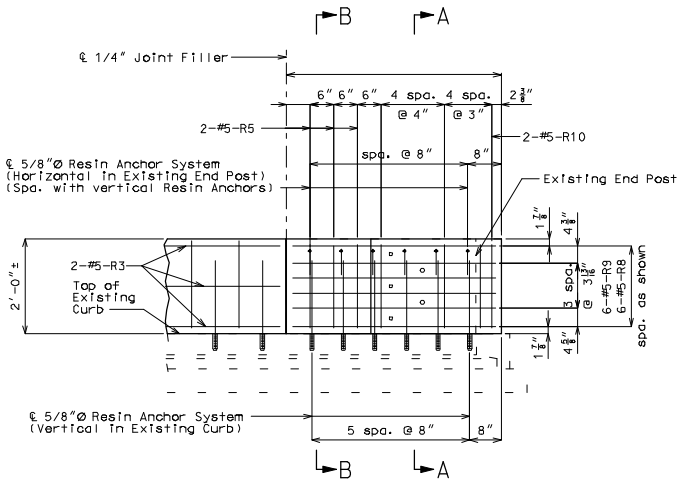

PART SECTION NEAR END POST

END BENT NO. (LEFT SHOWN)
END BENT NO. (RIGHT SIMILAR)

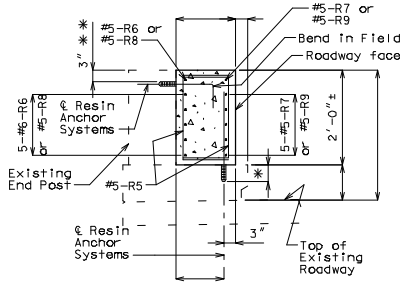

SECTION B-B

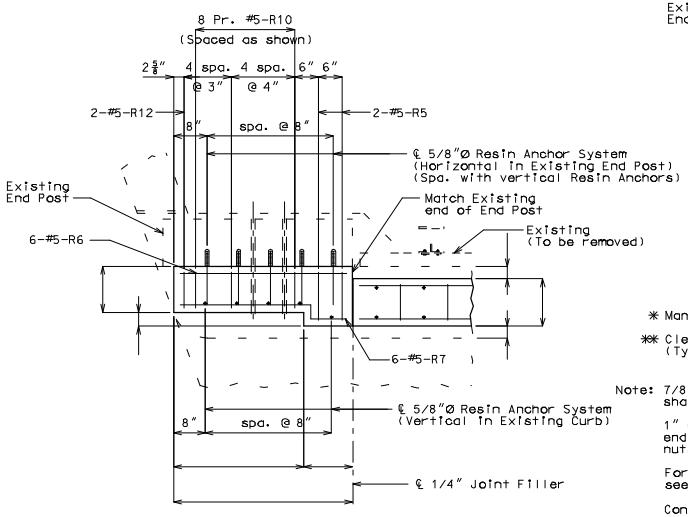

PART PLAN NEAR END POST

END BENT NO. (LEFT SHOWN)
END BENT NO. (RIGHT SIMILAR)

✱ Manufacturer's embedment length.

✱✱ Clearance to top of Resin Anchor Systems (Typical).

Note: 7/8"Ø Threaded Rods with nuts and washers shall be used in place of 7/8"Ø Bolts (ASTM A307).

1" Ø holes shall be drilled through existing end post for placement of 7/8"Ø threaded rods, nuts, and washers.

For Details of Resin Anchor Systems, see sheet no. .

Concrete traffic barrier delineators shall be placed on top of the safety median barrier curb (Type C) (Type D) as shown on Missouri Standard Plans 617.10 and in accordance with Sec 617. Concrete traffic barrier delineators will be considered completely covered by the contract unit price for "Safety Median Barrier Curb (Type C) (Type D)".

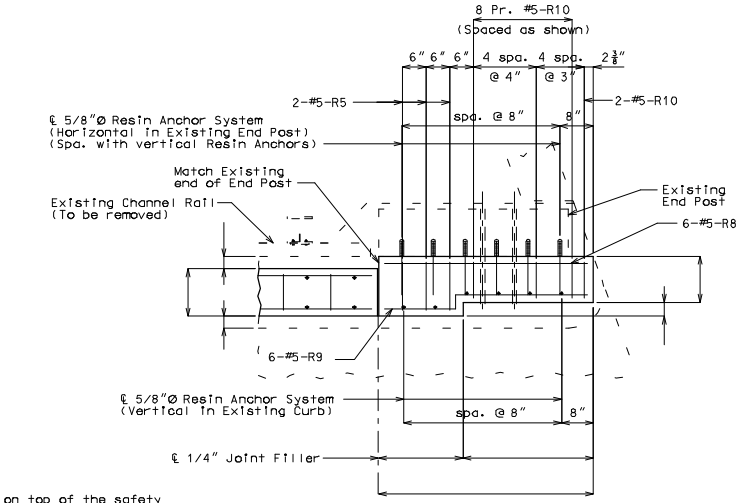

PART PLAN NEAR END POST

END BENT NO. (LEFT SHOWN)
END BENT NO. (RIGHT SIMILAR)

DETAILS OF CURB BLOCKOUT AT END BENTS

Detailed
Checked

Note: This drawing is not to scale. Follow dimensions. Sheet No. of

"THIS MEDIA SHOULD NOT BE CONSIDERED A CERTIFIED DOCUMENT."

DATE PREPARED	07/28/2008
ROUTE	✱
STATE	MO
DISTRICT	BR
SHEET NO.	✱
COUNTY	✱
JOB NO.	✱
CONTRACT ID.	
PROJECT NO.	
BRIDGE NO.	CBO-01

DESCRIPTION

DATE

MISSOURI HIGHWAYS AND TRANSPORTION COMMISSION

105 WEST CAPITOL
JEFFERSON CITY, MO 65102
1-888-ASK-MODOT (1-888-275-6636)

IF A SEAL IS PRESENT ON THIS SHEET IT HAS BEEN ELECTRONICALLY SEALED AND DATED.