Concrete for prestressed girders shall be Class A-1 with f'c = 8000 psi and f'ci = 6500 psi.

(+) indicates prestressing strand.

Use strands with an initial prestress force of kips.

Prestressing tendons shall be uncoated, seven-wire, low-relaxation strands, 0.6 inch diameter in accordance with AASHTO M 203, Grade 270. Pretensioned members shall be in accordance with Sec 1029.

Girders shall be lifted by devices designed by the fabricator.

✱✱ At the contractor's option the location for bent-up strands may be varied from that shown. The total number of bent-up strands shall not be changed. One strand tie bar is required for each layer of bent-up strands except at end bents which require one bar on the bottom layer of strands only. No additional payment will be made if additional strand tie bars are required.

✱✱✱ Girder top flange shall be steel troweled to a smooth finish for 8" at the edges, as shown. Apply two layers of 30-lb roofing felt as a bond breaker to this region only excluding where joint filler is applied. The center portion shall be rough finished by scarifying the surface transversely with a wire brush, and no laitance shall remain on the surface.

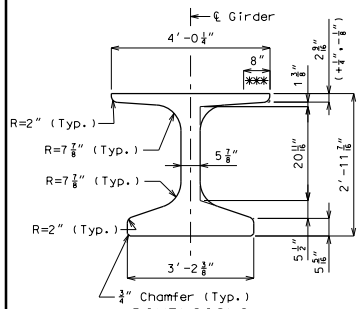

DIMENSIONS

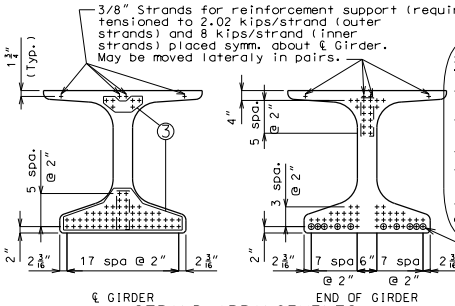

STRAND ARRANGEMENTS

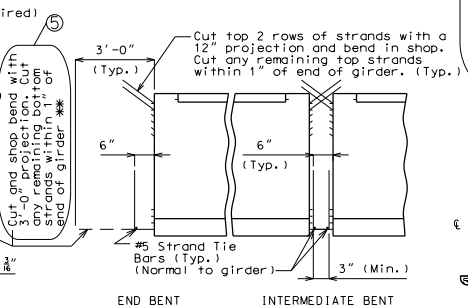

STRAND DETAILS AT GIRDER ENDS

TOP FLANGE BLOCKOUT DETAIL

BILL OF REINFORCING STEEL - EACH GIRDER

NO.	SIZE & MARK	ACTUAL LENGTH	SHAPE	BENDING DIAGRAM
XXX	3 G301	2'-11⅜"	15	SHAPE 15 (G301)
XXX	4 G401	XX'-XX"	20	SHAPE 20 (G401)
XXX	X G402	2'-9"	20	SHAPE 20 (G402)

WELDED WIRE REINFORCEMENT
(WWR4 & WWR5 as shown in Welded Wire Bending Diagrams)

SPAN NO.	WWR1 BAR SIZE	WWR1 S1	WWR1 L1	WWR1 J1	WWR2 BAR SIZE	WWR2 S2	WWR2 L2	WWR2 J2	WWR3 BAR SIZE	WWR3 S3	WWR3 L3	WWR3 J3
X	X	X"	X'-X"	X"	X	X"	X'-X"	X"	X	X"	X'-X"	X"
X	X	X"	X'-X"	X"	X	X"	X'-X"	X"	X	X"	X'-X"	X"

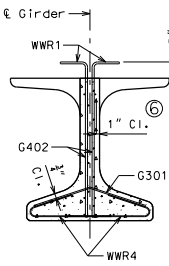

SECTION A-A
Strands not shown for clarity.

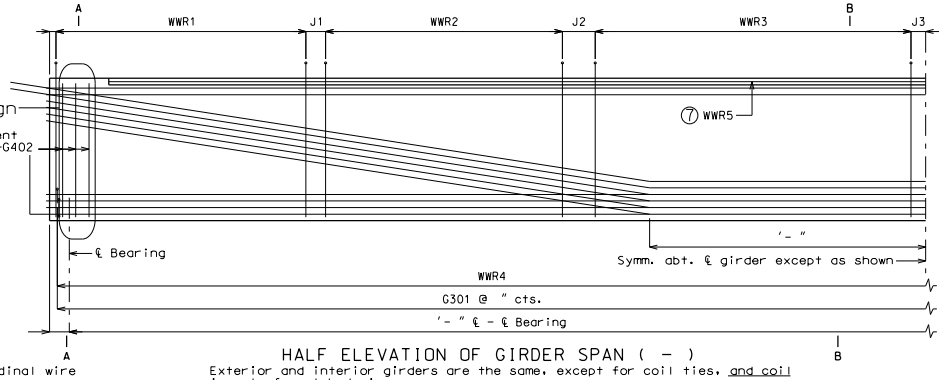

HALF ELEVATION OF GIRDER SPAN (-)

Exterior and interior girders are the same, except for coil ties, and coil inserts for slab drains.

⅜" Reinforcement support strands not shown for clarity.

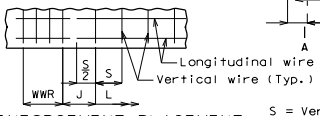

REINFORCEMENT PLACEMENT DETAIL

S = Vertical wire spacing
L = Length of WWR mats
J = Distance between WWR mats

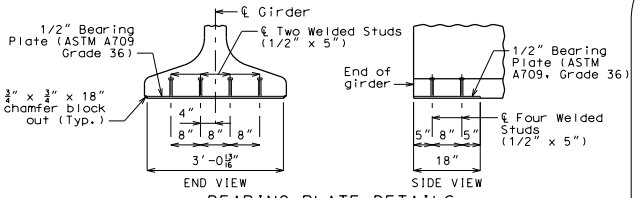

BEARING PLATE DETAILS

Galvanize the 1/2" bearing plate (ASTM A709 Grade 36) in accordance with ASTM A123.

Cost of furnishing, galvanizing, and installing the 1/2" bearing plate (ASTM A709 Grade 36) and welded studs in the prestressed girder will be considered completely covered by the contract unit price for Prestressed Concrete NU-Girder.

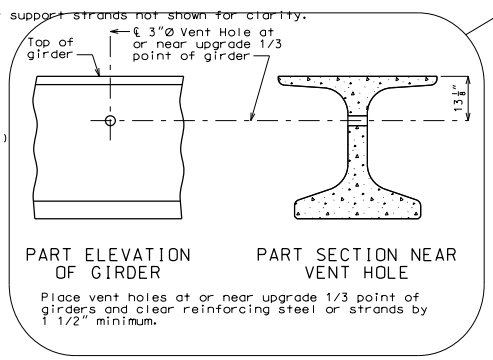

PART ELEVATION OF GIRDER

PART SECTION NEAR VENT HOLE

Place vent holes at or near upgrade 1/3 point of girders and clear reinforcing steel or strands by 1 1/2" minimum.

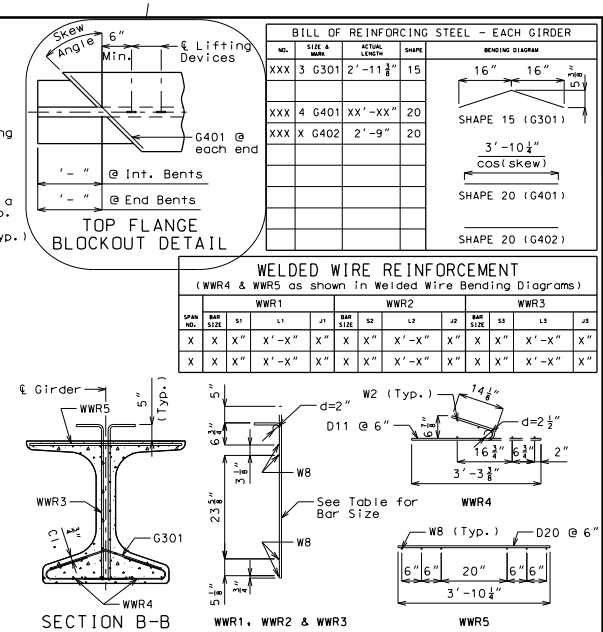

SECTION B-B
Strands not shown for clarity.

WWR1, WWR2 & WWR3

WELDED WIRE BENDING DIAGRAMS

REINFORCING STEEL NOTES:

All bar reinforcement shall be Grade 60.

Welded Wire Reinforcement (WWR) shall be in accordance with AASHTO M 221.

WWR shall not be epoxy coated.

All dimensions are out to out.

Hooks and bends shall be in accordance with the CRSI Manual of Standard Practice for Detailing Reinforced Concrete Structures, Stirrup and Tie Dimensions.

Minimum clearance to reinforcing shall be 1", unless otherwise shown.

Actual bar lengths are measured along centerline of bar.

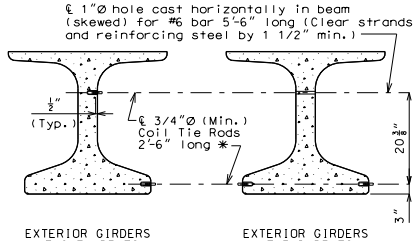

EXTERIOR GIRDERS AT INT. BENTS

EXTERIOR GIRDERS AT END BENTS
INTERIOR GIRDERS AT ALL BENTS

DETAILS OF COIL TIES

Cost of 3/4"Ø coil tie rods placed in diaphragms will be considered completely covered by the contract unit price for Prestressed Concrete NU-Girder.

Coil ties shall be held in place in the forms by slotted wire-setting-studs projecting thru forms. Studs are to be left in place or replaced with temporary plugs until girders are erected, then replaced by coil tie rods.

The contractor shall provide bracing necessary for lateral and torsional stability of the girders during construction of the concrete slab and remove the bracing after the slab has attained 75% design strength. The cost for furnishing, installing, and removing bracing will be considered completely covered by the contract unit price for Prestressed Concrete NU-Girder.

For location of coil inserts at slab drains, see Sheet No. .

For location of coil ties and #6 bars, see Sheets No. & .

Drilling is not allowed.

For Girder Camber Diagram, see Sheet No. .

Alternate bar reinforcement steel details are provided and may be used. Same type of reinforcing steel shall be used for all girders in all spans.

✱ Length of coil tie rods at exterior girders at end bents = '- ".

"THIS MEDIA SHOULD NOT BE CONSIDERED A CERTIFIED DOCUMENT."

DATE PREPARED	
12/4/2012	
ROUTE	STATE
✱	MO
DISTRICT	SHEET NO.
BR	✱
COUNTY	
✱	
JOB NO.	
✱	
CONTRACT ID.	
PROJECT NO.	
BRIDGE NO.	
NU 35	

DESCRIPTION

DATE

MISSOURI HIGHWAYS AND TRANSPORTATION COMMISSION

105 WEST CAPITOL
JEFFERSON CITY, MO 65102
1-888-ASK-MoDOT (1-888-275-6636)

IF A SEAL IS PRESENT ON THIS SHEET IT HAS BEEN ELECTRONICALLY SEALED AND DATED.

REV.

Detailed
Checked

Note: This drawing is not to scale. Follow dimensions.

Sheet No. of