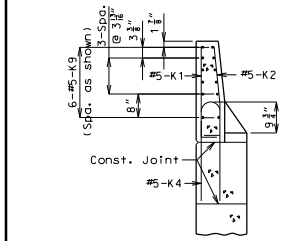

SECTION A-A

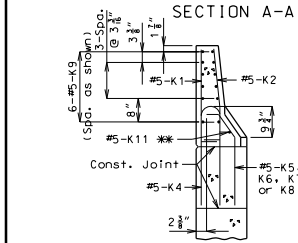

SECTION B-B

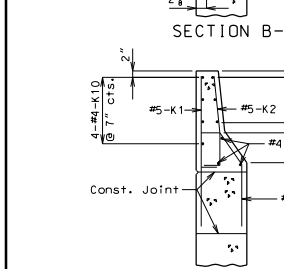

SECTION C-C

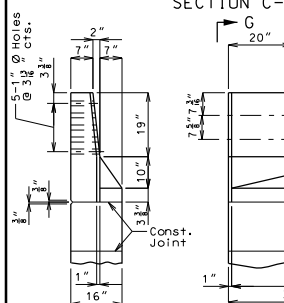

PART ELEVATION G-G

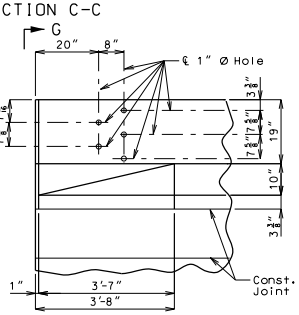

PART ELEVATION

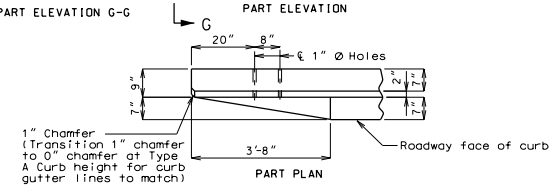

PART PLAN

DETAILS OF GUARD RAIL ATTACHMENT

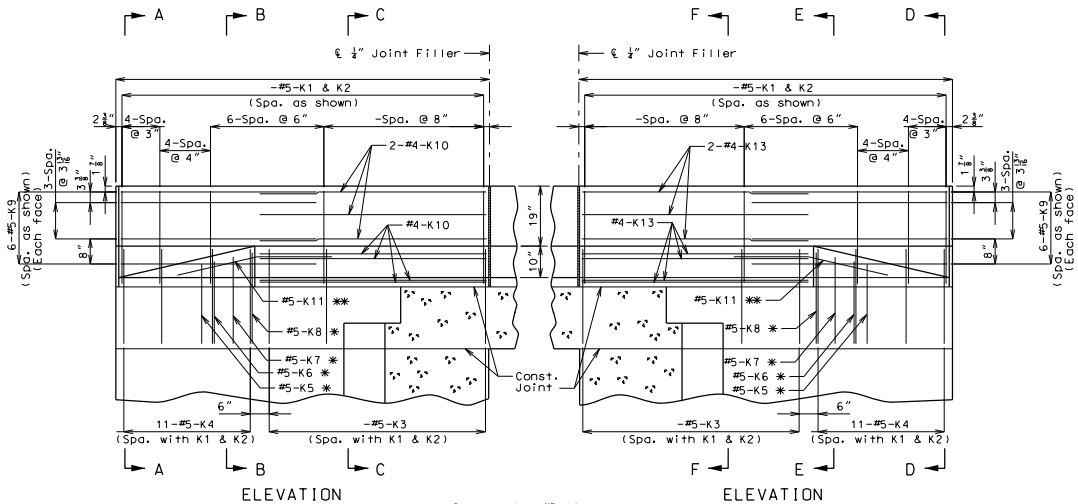

ELEVATION

ELEVATION

✱ Spaced with #5-K4 bars.

✱✱ Fit #5-K11 bar to follow transition face of curb.

✱✱✱ Clip #5-K4 bars as required to maintain minimum clearance at bottom of wing.

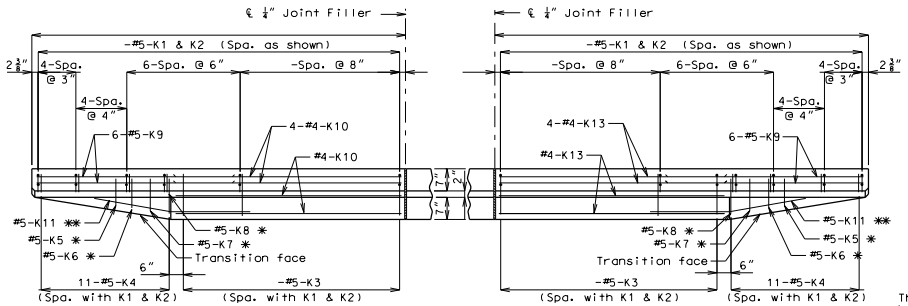

PLAN

PLAN

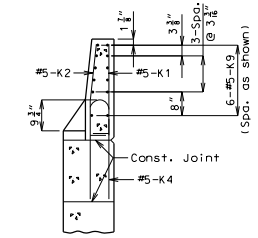

SECTION D-D

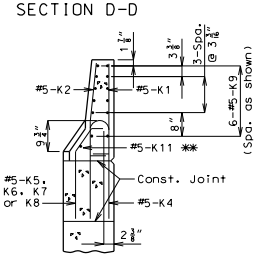

SECTION E-E

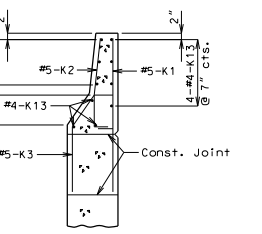

SECTION F-F

Standard Drawing Guidance (do not show on plans):

For #5-K3 & K4 Bars, use Shape 11 or create shape as necessary when development length requires hook.

Notes:

Use a minimum lap of 2'-0" between K9 and K10 or K13 bars.

Concrete traffic barrier delineators shall be placed on top of the safety barrier curb as shown on Missouri Standard Plans 617.10 and in accordance with Sec 617. Delineators on bridges with two-lane, two-way traffic shall have retroreflective sheeting on both sides. Concrete traffic barrier delineators will be considered completely covered by the contract unit price for "Safety Barrier Curb".

DETAILS OF SAFETY BARRIER CURB AT END BENTS

(Left barrier curb shown; right barrier curb similar)

The top two K9, K10 or K13 bars shall be kept with position close to those shown in Sections A-A thru F-F

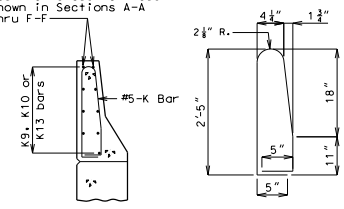

(K3 or K4 thru K8 bars not shown for clarity)

K1-K2 BAR PERMISSIBLE ALTERNATE SHAPE (✱✱✱✱)

(✱✱✱✱) The K1 and K2 bar combination may be furnished as one bar as shown, at the contractor's option.

"THIS MEDIA SHOULD NOT BE CONSIDERED A CERTIFIED DOCUMENT."

DATE PREPARED	
7/21/2011	
ROUTE	STATE
✱	MO
DISTRICT	SHEET NO.
BR	✱
COUNTY	
✱	
JOB NO.	
✱	
CONTRACT ID.	
PROJECT NO.	
BRIDGE NO.	
BAN 11	

DESCRIPTION

DATE

MISSOURI HIGHWAYS AND TRANSPORTATION COMMISSION

105 WEST CAPITOL
JEFFERSON CITY, MO 65102
1-888-ASK-MODOT (1-888-275-6636)

IF A SEAL IS PRESENT ON THIS SHEET IT HAS BEEN ELECTRONICALLY SEALED AND DATED.

Detailed
Checked

Note: This drawing is not to scale. Follow dimensions. Sheet No. of