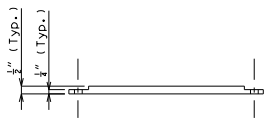

ELEVATION OF GALVANIZED STEEL STOPPER PLATE

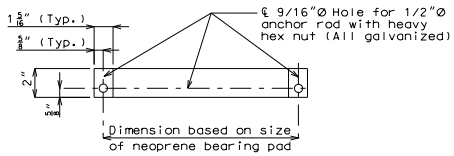

PLAN OF GALVANIZED STEEL STOPPER PLATE

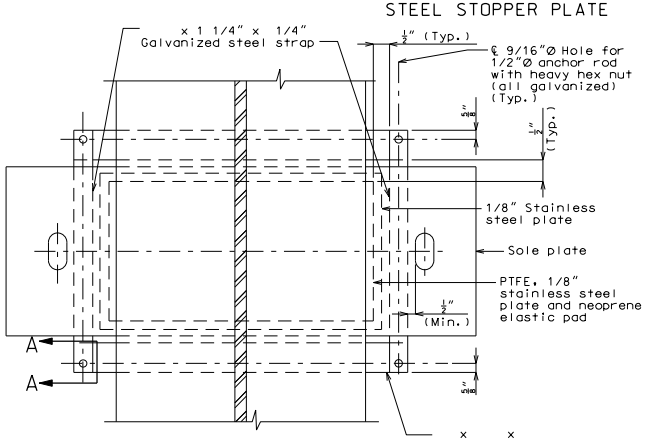

PART PLAN SHOWING STOPPER PLATE

Stopper plates and straps shall be provided to prevent loss of support due to creeping of PTFE bearings. Payment for fabricating and installing the stopper plates and straps will be considered completely covered by the contract unit price for Type N PTFE Bearing.

The bottom face of the 1/8" stainless steel plate that is welded to the sole plate shall be lubricated with a lubricant that is approved by the bearing manufacturer.

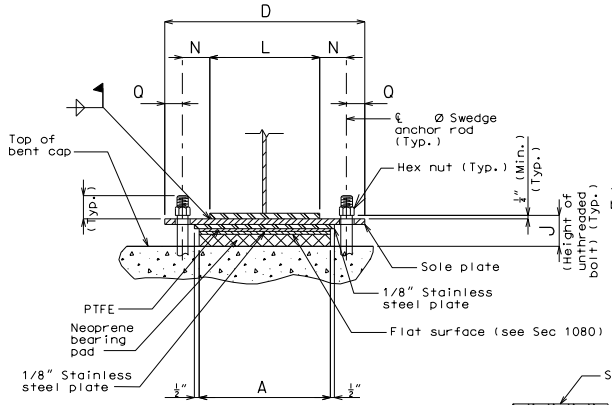

END VIEW

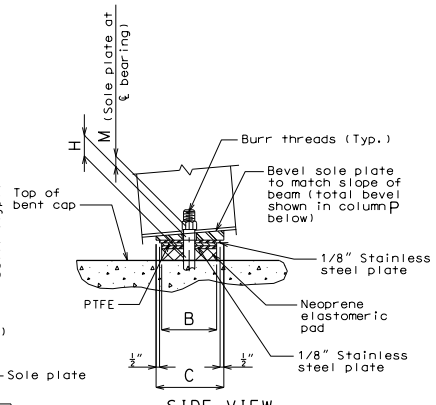

SIDE VIEW

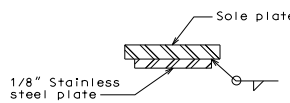

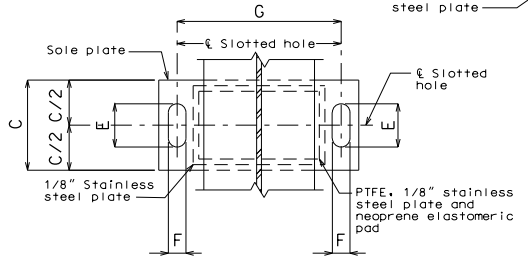

PART PLAN

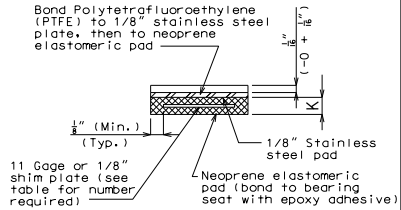

NEOPRENE ELASTOMERIC PAD

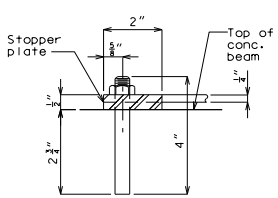

SECTION A-A

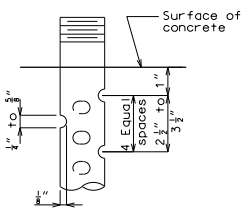

DETAIL FOR 3/4"Ø THRU 2 1/2"Ø ANCHOR RODS

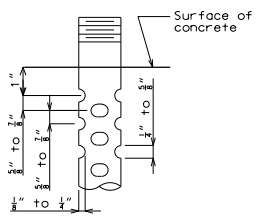

OPTIONAL DETAIL FOR 1 3/8"Ø THRU 2 1/2"Ø ANCHOR RODS

SWEDGE ANCHOR ROD DETAILS

(1) USE NOTE H3.29 OR H3.29.1, CHECK WITH STRUCTURAL PROJECT MANAGER. H3.29 SHOWN

GENERAL NOTES:

Anchor rods shall be Ø ASTM F1554 Grade 55 swedged rods and shall extend into the concrete with AASHTO M291 (ASTM A563) Grade A Hex or Heavy Hex nuts. Actual manufacturer's certified mill test reports (chemical and mechanical) shall be provided. Swedging shall be 1" less than extension into the concrete.

Anchor rod shall be at the ℄ of slotted hole at 60°F. Bearing position shall be adjusted R for each 10° fall or rise in temperature at installation.

All structural steel for the anchor rods and heavy hexagon nuts shall be coated with a minimum of two coats of inorganic zinc primer (5 mils minimum).

Neoprene Elastomeric Pads shall be 70 Durometer.

Structural steel for sole plate shall be ASTM A709 Grade and shall be coated with a minimum of two coats of inorganic zinc primer (5 mils minimum). The stainless steel plate shall be protected from any coating. (1)

Type N PTFE Bearings shall be in accordance with Sec 716.

PTFE SLIDING BEARINGS

BENT NO.	A	B	C	D	E	F	G	H	J	K	L	M	N	P	Q	R	NUMBER OF SHIM PLATES(✱)	NUMBER REQUIRED
																	TOTAL BEARINGS	

(✱) The required shim plate shall be placed between layers of elastomer and molded together to form an integral unit.

DETAILS OF TYPE "N" PTFE BEARINGS

Detailed
Checked

Note: This drawing is not to scale. Follow dimensions.

Sheet No. of

"THIS MEDIA SHOULD NOT BE CONSIDERED A CERTIFIED DOCUMENT."

DATE PREPARED	
9/10/2010	
ROUTE	STATE
✱	MO
DISTRICT	SHEET NO.
BR	✱
COUNTY	
✱	
JOB NO.	
✱	
CONTRACT ID.	
PROJECT NO.	
BRIDGE NO.	
BRG 7	

DESCRIPTION

DATE

MISSOURI HIGHWAYS AND TRANSPORTATION COMMISSION

105 WEST CAPITOL
JEFFERSON CITY, MO 65102
1-888-ASK-MODOT (1-888-275-6636)

IF A SEAL IS PRESENT ON THIS SHEET IT HAS BEEN ELECTRONICALLY SEALED AND DATED.