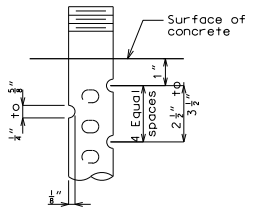

DETAIL FOR 3/4"Ø THRU 2 1/2"Ø ANCHOR RODS

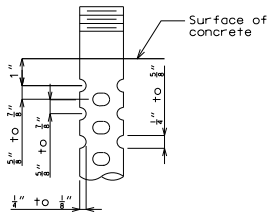

OPTIONAL DETAIL FOR 1 3/8"Ø THRU 2 1/2"Ø ANCHOR RODS

SWEDGE ANCHOR ROD DETAILS

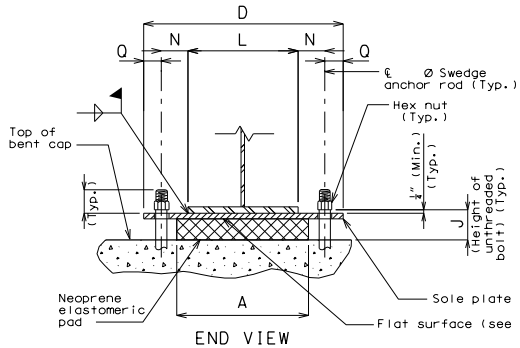

END VIEW

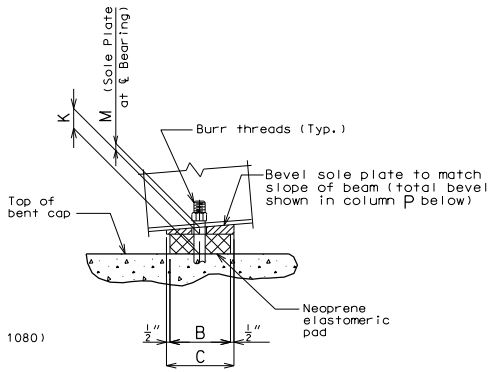

SIDE VIEW

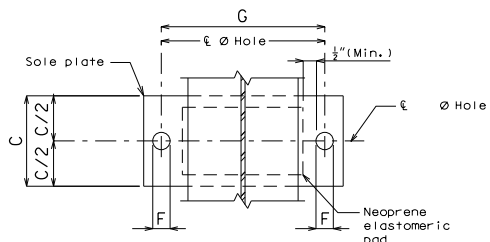

PART PLAN

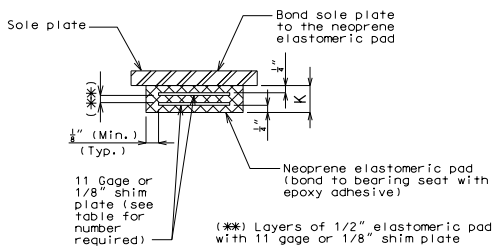

NEOPRENE ELASTOMERIC PAD

(1) USE NOTE H3.49 OR H3.49.1, CHECK WITH STRUCTURAL PROJECT MANAGER.

FIXED BEARINGS															
BENT NO.	A	B	C	D	F	G	J	K	L	M	N	P	Q	NUMBER OF SHIM PLATES(✱)	NUMBER REQUIRED
														TOTAL BEARINGS	

(✱) The required shim plate shall be placed between layers of elastomer and molded together to form an integral unit.

GENERAL NOTES:

Anchor rods shall be Ø ASTM F1554 Grade 55 swedged rods and shall extend into the concrete with AASHTO M291 (ASTM A563) Grade A Hex or Heavy Hex nuts. Actual manufacturer's certified mill test reports (chemical and mechanical) shall be provided. Swedging shall be 1" less than extension into the concrete.

All structural steel for the anchor rods and heavy hexagon nuts shall be coated with a minimum of two coats of inorganic zinc primer (5 mils minimum).

Neoprene Elastomeric Pads shall be Durometer.

Structural steel for sole plate shall be ASTM A709 Grade and shall be coated with a minimum of two coats of inorganic zinc primer (5 mils minimum). (1)

Laminated Neoprene Bearing Pad Assembly shall be in accordance with Sec 716.

DETAILS OF LAMINATED NEOPRENE BEARING PAD ASSEMBLY

Detailed
Checked

Note: This drawing is not to scale. Follow dimensions.

Sheet No. of

"THIS MEDIA SHOULD NOT BE CONSIDERED A CERTIFIED DOCUMENT."

DATE PREPARED	
8/4/2011	
ROUTE	STATE
✱	MO
DISTRICT	SHEET NO.
BR	✱
COUNTY	
✱	
JOB NO.	
✱	
CONTRACT ID.	
PROJECT NO.	
BRIDGE NO.	
BRG 8	

DESCRIPTION

DATE

MISSOURI HIGHWAYS AND TRANSPORTATION COMMISSION

105 WEST CAPITOL
JEFFERSON CITY, MO 65102
1-888-ASK-MODOT (1-888-275-6636)

IF A SEAL IS PRESENT ON THIS SHEET IT HAS BEEN ELECTRONICALLY SEALED AND DATED.