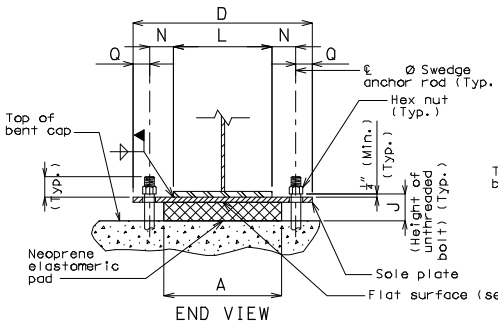

END VIEW

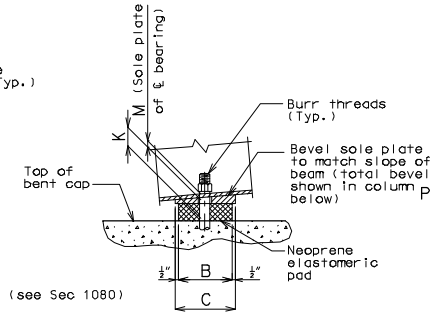

SIDE VIEW

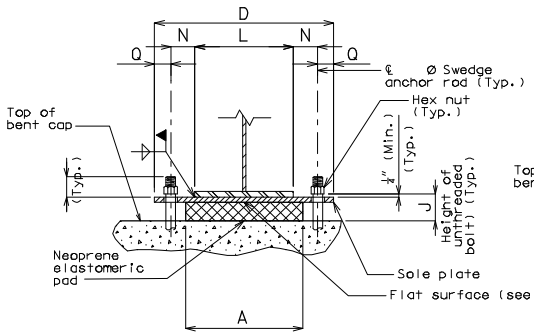

END VIEW

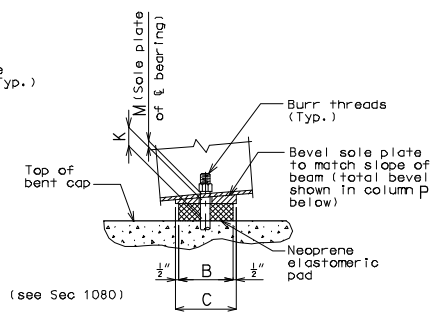

SIDE VIEW

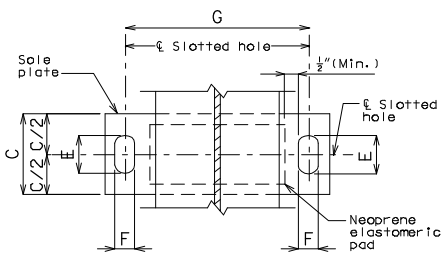

PART PLAN

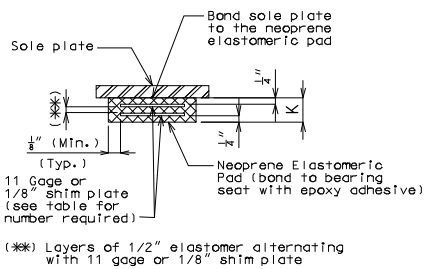

(✱✱) Layers of 1/2" elastomer alternating with 11 gage or 1/8" shim plate

NEOPRENE ELASTOMERIC PAD

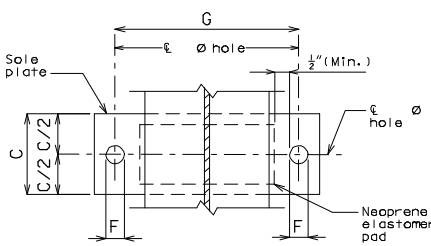

PART PLAN

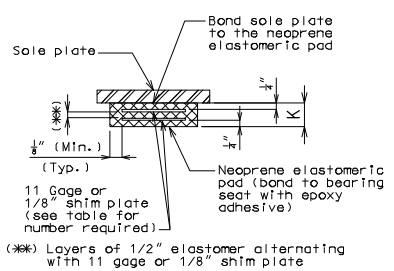

(✱✱) Layers of 1/2" elastomer alternating with 11 gage or 1/8" shim plate

NEOPRENE ELASTOMERIC PAD

EXPANSION BEARINGS																	
BENT NO.	A	B	C	D	E	F	G	J	K	L	M	N	P	Q	R	NUMBER OF SHIM PLATES(✱)	NUMBER REQUIRED
																TOTAL BEARINGS	

(✱) The required shim plate shall be placed between layers of elastomer and molded together to form an integral unit.

FIXED BEARINGS																
BENT NO.	A	B	C	D	F	G	J	K	L	M	N	P	Q	NUMBER OF SHIM PLATES(✱)	NUMBER REQUIRED
														TOTAL BEARINGS	

(✱) The required shim plate shall be placed between layers of elastomer and molded together to form an integral unit.

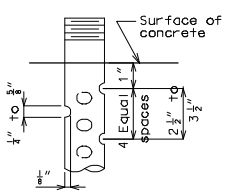

DETAIL OF 3/4"Ø THRU 2 1/2"Ø ANCHOR RODS

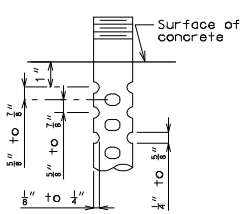

OPTIONAL DETAIL OF 1 3/8"Ø THRU 2 1/2"Ø ANCHOR RODS

SWEDGE ANCHOR ROD DETAILS

(1) USE NOTE H3.49 OR H3.49.1. CHECK WITH STRUCTURAL PROJECT MANAGER. H3.49 SHOWN.

GENERAL NOTES:

Anchor rods shall be Ø ASTM F1554 Grade 55 swedged rods and shall extend into the concrete with AASHTO M291 (ASTM A563) Grade A Hex or Heavy Hex nuts. Actual manufacturer's certified mill test reports (chemical and mechanical) shall be provided. Swedging shall be 1" less than extension into the concrete.

Anchor rod shall be at the ℄ of slotted hole at 60°F. Bearing position shall be adjusted R for each 10° fall or rise in temperature at installation.

All structural steel for the anchor rods and heavy hexagon nuts shall be coated with a minimum of two coats of inorganic zinc primer (5 mils minimum).

Neoprene Elastomeric Pads shall be Durometer.

Structural steel for sole plate shall be ASTM A709 Grade and shall be coated with a minimum of two coats of inorganic zinc primer (5 mils minimum).

Laminated Neoprene Bearing Pad Assembly shall be in accordance with Sec 716.

DETAILS OF LAMINATED NEOPRENE BEARING PAD ASSEMBLY

Detailed
Checked

Note: This drawing is not to scale. Follow dimensions. Sheet No. of

"THIS MEDIA SHOULD NOT BE CONSIDERED A CERTIFIED DOCUMENT."

DATE PREPARED	
07/28/2008	
ROUTE ✱	STATE MO
DISTRICT BR	SHEET NO. ✱
COUNTY ✱	
JOB NO. ✱	
CONTRACT ID.	
PROJECT NO.	
BRIDGE NO. BRG 10	

DESCRIPTION

DATE

MISSOURI HIGHWAYS AND TRANSPORTION COMMISSION

105 WEST CAPITOL
JEFFERSON CITY, MO 65102
1-888-ASK-MODOT (1-888-275-6636)

IF A SEAL IS PRESENT ON THIS SHEET IT HAS BEEN ELECTRONICALLY SEALED AND DATED.