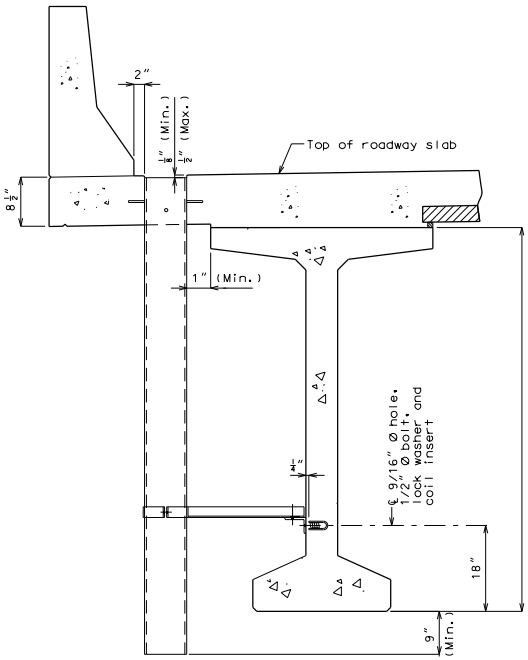

PART SECTION NEAR DRAIN

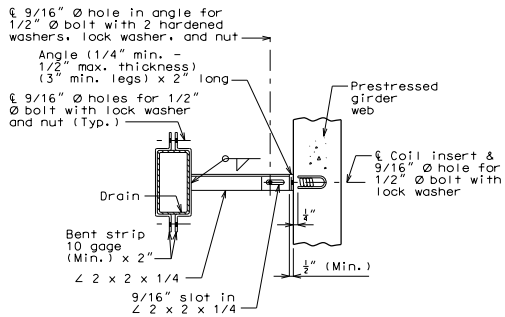

PART SECTION SHOWING BRACKET ASSEMBLY

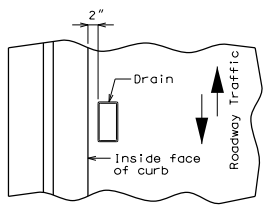

PART PLAN OF SLAB AT DRAIN

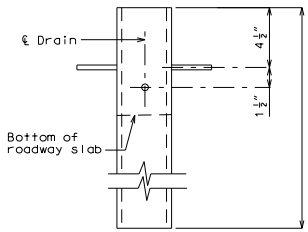

ELEVATION OF DRAIN

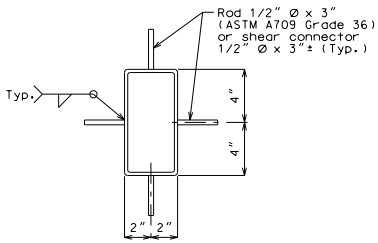

PLAN OF DRAIN

SLAB DRAIN DETAILS

Notes:

Slab drains may be fabricated of either 1/4" welded sheets of ASTM A709 Grade 36 steel or from 1/4" structural steel tubing ASTM A500 or A501.

Slab drain bracket assembly shall be ASTM A709 Grade 36 steel.

Outside dimensions of drains are 8" x 4".

Locate drains in slab by dimensions shown in Part Section Near Drain.

Reinforcing steel shall be shifted to clear drains.

The drains, coil inserts and bracket assembly shall be galvanized in accordance with ASTM A123.

All bolts, hardened washers, lock washers and nuts shall be galvanized in accordance with ASTM A153.

The coil insert required for the bracket assembly attachment shall be located on the prestressed girder shop drawings.

Shop drawings will not be required for the slab drains and the bracket assembly.

Coil inserts shall have a concrete pull-out strength (ultimate load) of at least 2,500 pounds in 5,000 psi concrete.

The bolt required to attach the slab drain bracket assembly to the prestressed girder web shall be supplied by the prestressed girder fabricator.

FOR CANTILEVERS 3'-8" OR MORE

"THIS MEDIA SHOULD NOT BE CONSIDERED A CERTIFIED DOCUMENT."

DATE PREPARED	
7/23/2012	
ROUTE	STATE
*	MO
DISTRICT	SHEET NO.
BR	*
COUNTY	
*	
JOB NO.	
*	
CONTRACT ID.	
PROJECT NO.	
BRIDGE NO.	
DRA 4	

DATE	DESCRIPTION

MISSOURI HIGHWAYS AND TRANSPORTATION COMMISSION
105 WEST CAPITOL
JEFFERSON CITY, MO 65102
1-888-ASK-MODOT (1-888-275-6636)

IF A SEAL IS PRESENT ON THIS SHEET IT HAS BEEN ELECTRONICALLY SEALED AND DATED.

Detailed
Checked

Note: This drawing is not to scale. Follow dimensions.

Sheet No. of