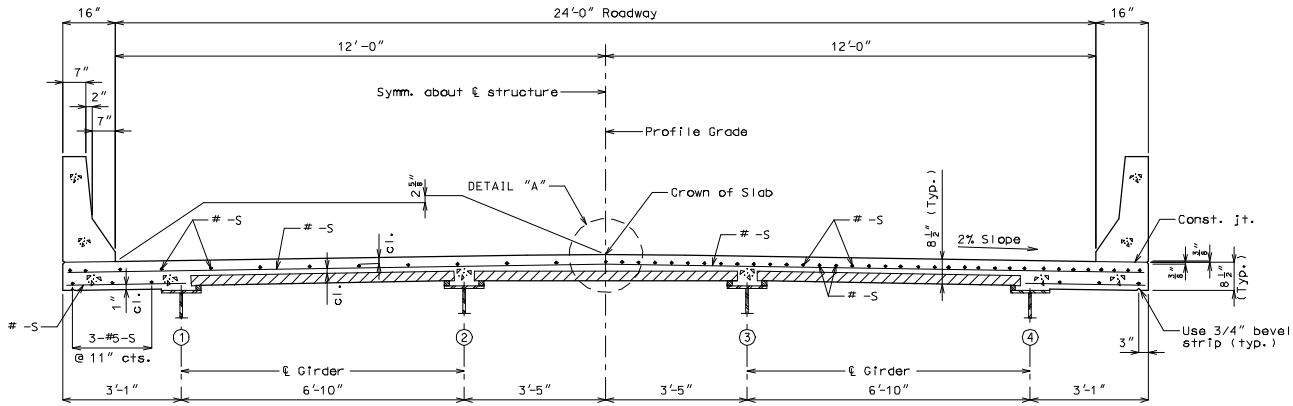

HALF SECTION NEAR ℄ SPAN HALF SECTION NEAR INTERMEDIATE BENT

24'-0" ROADWAY - 4 GIRDER (SYMM.)

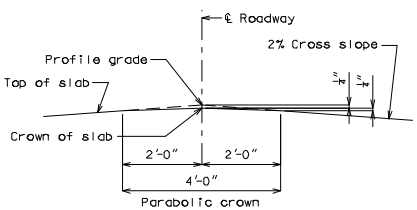

DETAIL "A"

"THIS MEDIA SHOULD NOT BE CONSIDERED A CERTIFIED DOCUMENT."

DATE PREPARED 07/28/2008	
ROUTE *	STATE MO
DISTRICT BR	SHEET NO. *
COUNTY *	
JOB NO. *	
CONTRACT ID.	
PROJECT NO.	
BRIDGE NO. SLAB 0	

DESCRIPTION

DATE

MISSOURI HIGHWAYS AND TRANSPORTION COMMISSION

105 WEST CAPITOL
JEFFERSON CITY, MO 65102
1-888-ASK-MODOT (1-888-275-6636)

IF A SEAL IS PRESENT ON THIS SHEET IT HAS BEEN ELECTRONICALLY SEALED AND DATED.

REV.

Detailed
Checked

Note: This drawing is not to scale. Follow dimensions.

Sheet No. of