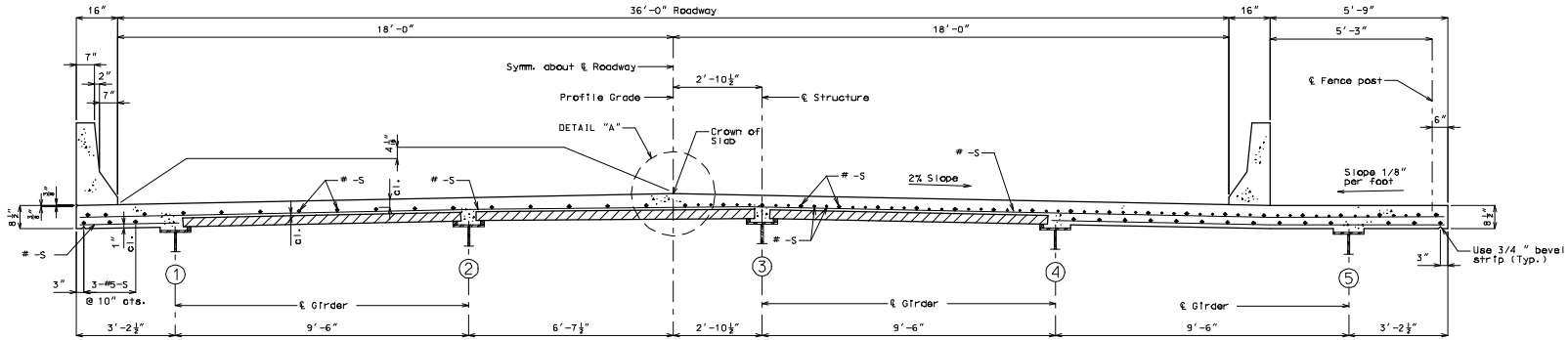

HALF SECTION NEAR ℄ SPAN HALF SECTION NEAR INTERMEDIATE BENT

36'-0" ROADWAY - 5 GIRDER

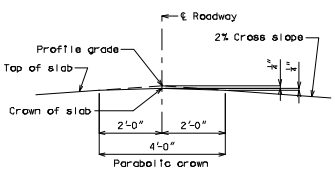

DETAIL "A"

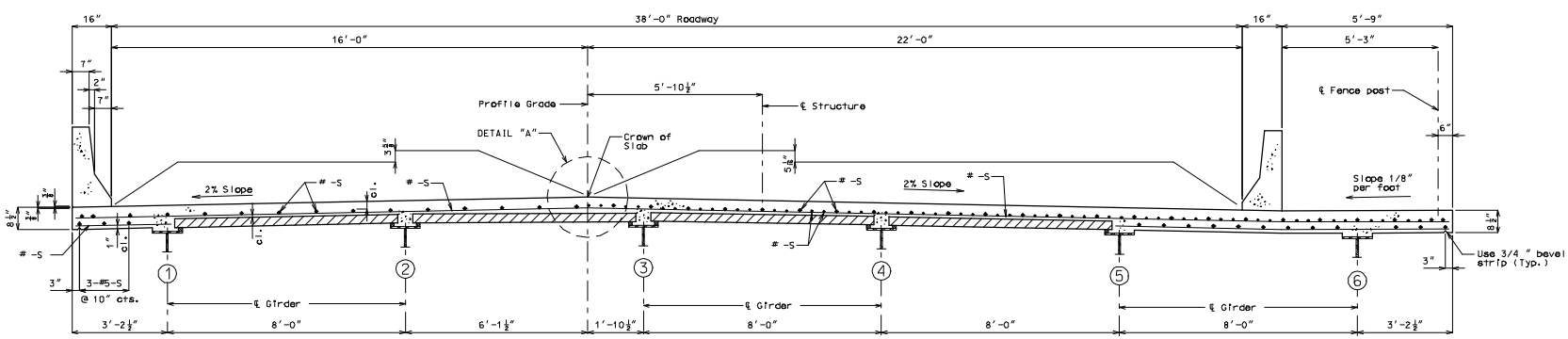

HALF SECTION NEAR ℄ SPAN HALF SECTION NEAR INTERMEDIATE BENT

38'-0" ROADWAY - 6 GIRDER (UNSYMM.)

(Cross section shown is for divided roadways with two 12'-0" lanes & a 4'-0" and 10'-0" shoulder.)

Detailed
Checked

Note: This drawing is not to scale. Follow dimensions.

Sheet No. of

"THIS MEDIA SHOULD NOT BE CONSIDERED A CERTIFIED DOCUMENT."

DATE PREPARED	07/28/2008
ROUTE	*
STATE	MO
DISTRICT	BR
SHEET NO.	*
COUNTY	*
JOB NO.	*
CONTRACT ID.	
PROJECT NO.	
BRIDGE NO.	SLAB 7

DESCRIPTION

DATE

MISSOURI HIGHWAYS AND TRANSPORTION COMMISSION

105 WEST CAPITOL
JEFFERSON CITY, MO 65102
1-888-ASK-MODOT (1-888-275-6636)

IF A SEAL IS PRESENT ON THIS SHEET IT HAS BEEN ELECTRONICALLY SEALED AND DATED.

REV.