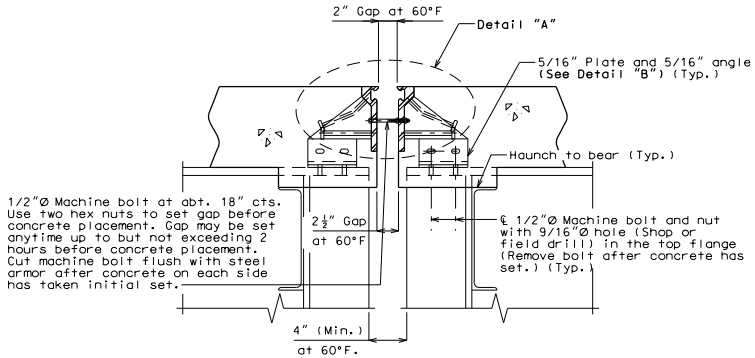

SECTION A-A

Note: Strip seal gland not shown for clarity.

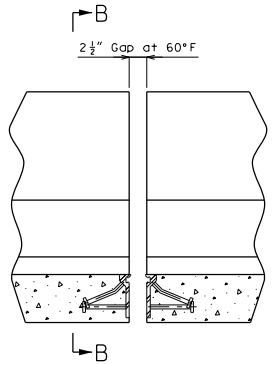

Note: Strip seal gland not shown for clarity.

PART ELEVATION OF BARRIER CURB

GENERAL NOTES:

Expansion joint system shall be fabricated in one section, except for stage construction and when the length is over 50 feet. A complete joint penetration groove welded splice shall be required. Welds shall be ground flush to provide a smooth surface. The expansion joint system shall be fabricated and installed to the crown and grade of the roadway.

The strip seal gland shall be installed in joints in one continuous piece without field splices. Factory splicing will be permitted for joints in excess of 53 feet.

Structural steel for the expansion joint system shall be ASTM A709 Grade 36 except the steel armor may be ASTM A709 Grade 50W. Anchors for the expansion joint system shall be in accordance with Sec 1037. Strip seal expansion joint system shall be in accordance with Sec 717.

Structural steel for the expansion joint system shall be coated with a minimum of two coats of inorganic zinc primer (5 mils minimum) or galvanized in accordance with ASTM A123. Anchors need not be protected from overspray.

Plan dimensions are based on installation at 60°F. The expansion gap and other dimensions shall be increased or decreased [ ] for ② each 10° fall or rise in temperature at installation.

Longitudinal reinforcing steel shall be placed so that ends shall not be more than ±1" from vertical leg of the steel armor at the expansion joint system.

Concrete shall be forced under and around steel armor and anchors. Proper consolidation of the concrete shall be achieved by localized internal vibration.

STANDARD DRAWING GUIDANCE (do not show on plans):

① Strip seal gland size.

② Installation gap temperature adjustment normal to the joint.

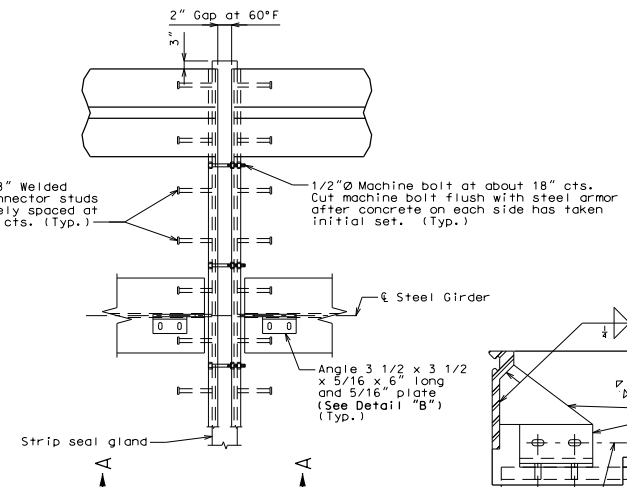

PART PLAN

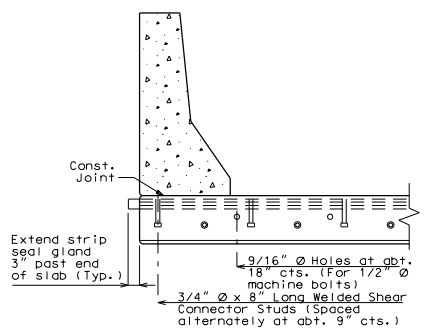

PART SECTION B-B

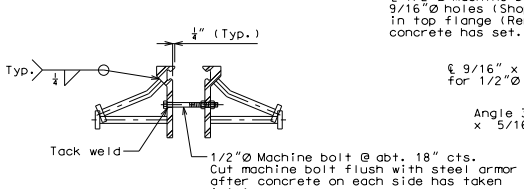

DETAIL "A"

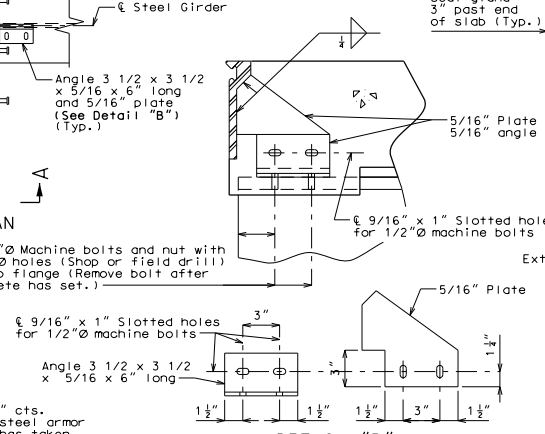

DETAIL "B"

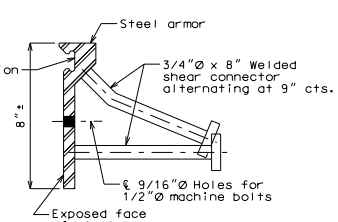

DETAIL OF JOINT ARMOR

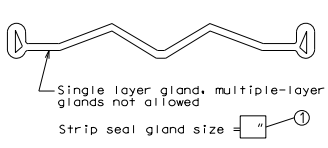

DETAIL OF GLAND

DETAILS OF STRIP SEAL AT INTERMEDIATE BENT NO.

Detailed
Checked

Note: This drawing is not to scale. Follow dimensions.

Sheet No. of

"THIS MEDIA SHOULD NOT BE CONSIDERED A CERTIFIED DOCUMENT."

DATE PREPARED	
1/5/2012	
ROUTE	STATE MO
DISTRICT	SHEET NO.
COUNTY	
JOB NO.	
CONTRACT ID.	
PROJECT NO.	
BRIDGE NO. STS20	

REV.	DESCRIPTION	DATE

MISSOURI HIGHWAYS AND TRANSPORTATION COMMISSION
105 WEST CAPITOL
JEFFERSON CITY, MO 65102
1-888-ASK-MODOT (1-888-275-6636)

IF A SEAL IS PRESENT ON THIS SHEET IT HAS BEEN ELECTRONICALLY SEALED AND DATED.