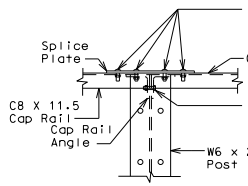

TYPICAL SPLICE ELEVATION

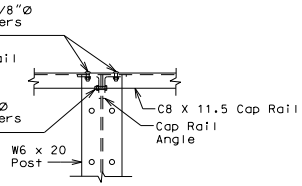

CONNECTION TO RAIL POST ELEVATION

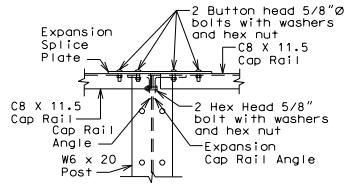

EXPANSION SPLICE ELEVATION

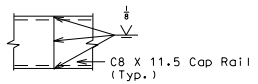

OPTIONAL SPLICE

Shop or field splice at any location (Max. one per panel)

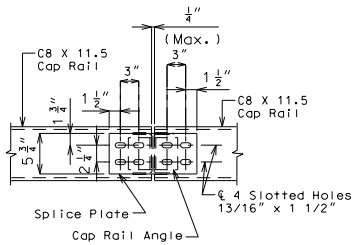

TYPICAL SPLICE PLAN

Shop or field splice at any location (Max. one per panel)

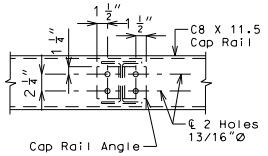

CONNECTION TO RAIL POST PLAN

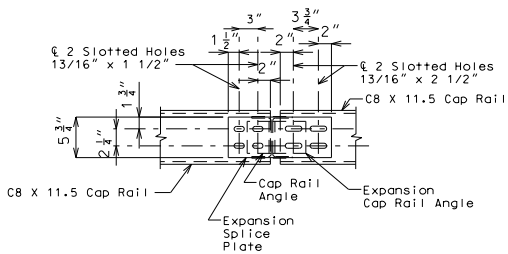

EXPANSION SPLICE PLAN

Expansion slots same side of post as exp. joint

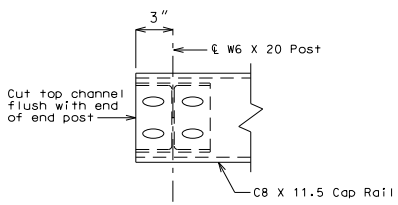

PART PLAN B-B

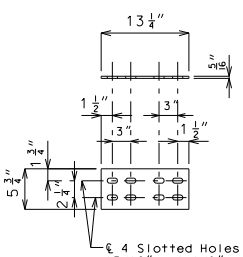

SPLICE PLATE

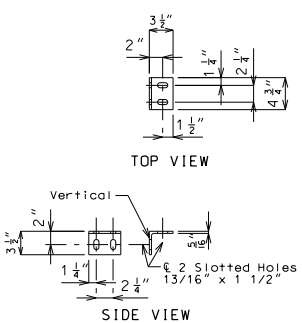

CAP RAIL ANGLE

∠3-1/2 x 3 1/2 x 5/16

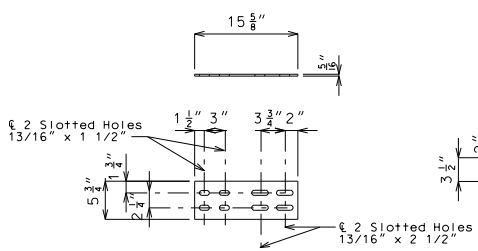

EXPANSION SPLICE PLATE

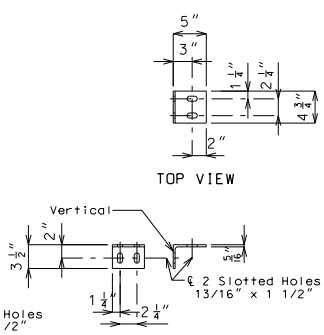

EXPANSION CAP RAIL ANGLE

∠5 x 3 1/2 x 5/16

"THIS MEDIA SHOULD NOT BE CONSIDERED A CERTIFIED DOCUMENT."

DATE PREPARED	
11/16/2011	
ROUTE	STATE
*	MO
DISTRICT	SHEET NO.
BR	*
COUNTY	
*	
JOB NO.	
*	
CONTRACT ID.	
PROJECT NO.	
BRIDGE NO.	
THB 1B	

DESCRIPTION

DATE

MISSOURI HIGHWAYS AND TRANSPORTATION COMMISSION

105 WEST CAPITOL
JEFFERSON CITY, MO 65102
1-888-ASK-MODOT (1-888-275-6636)

IF A SEAL IS PRESENT ON THIS SHEET IT HAS BEEN ELECTRONICALLY SEALED AND DATED.

Detailed
Checked

Note: This drawing is not to scale. Follow dimensions.

Sheet No. of