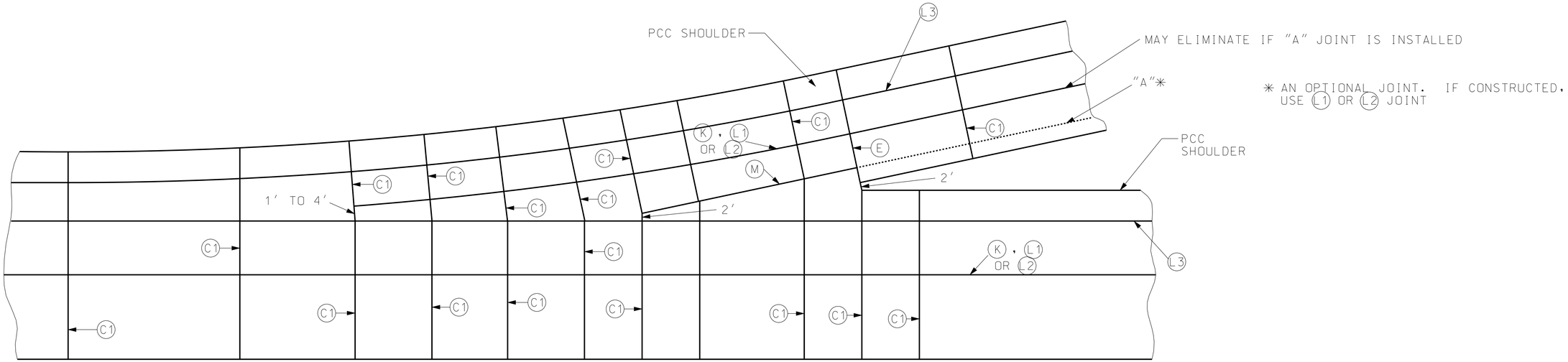

DETAIL B
(FROM SHEET 1 OF 4)

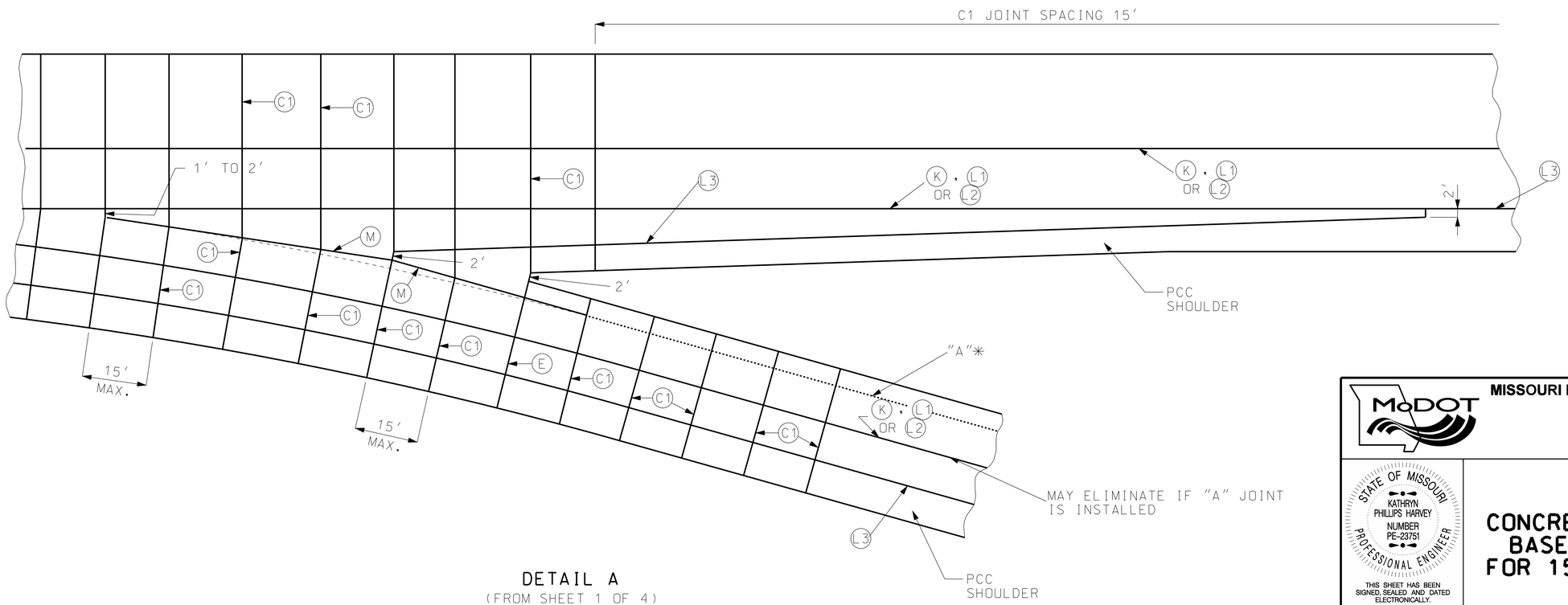

DETAIL A
(FROM SHEET 1 OF 4)

MISSOURI HIGHWAYS AND TRANSPORTATION COMMISSION
105 WEST CAPITOL
JEFFERSON CITY, MO 65102
1-888-ASK-MODOT (1-888-275-6636)

STATE OF MISSOURI
KATHRYN PHILLIPS HARVEY
NUMBER PE-23751
PROFESSIONAL ENGINEER
THIS SHEET HAS BEEN SIGNED, SEALED AND DATED ELECTRONICALLY.

CONCRETE PAVEMENT AND BASE APPURTENANCES FOR 15' JOINT SPACING

DATE EFFECTIVE: 06/01/2010
DATE PREPARED: 4/1/2010

502.05M

SHEET NO. 2 OF 4

IF A SEAL IS PRESENT ON THIS SHEET IT HAS BEEN ELECTRONICALLY SEALED AND DATED.