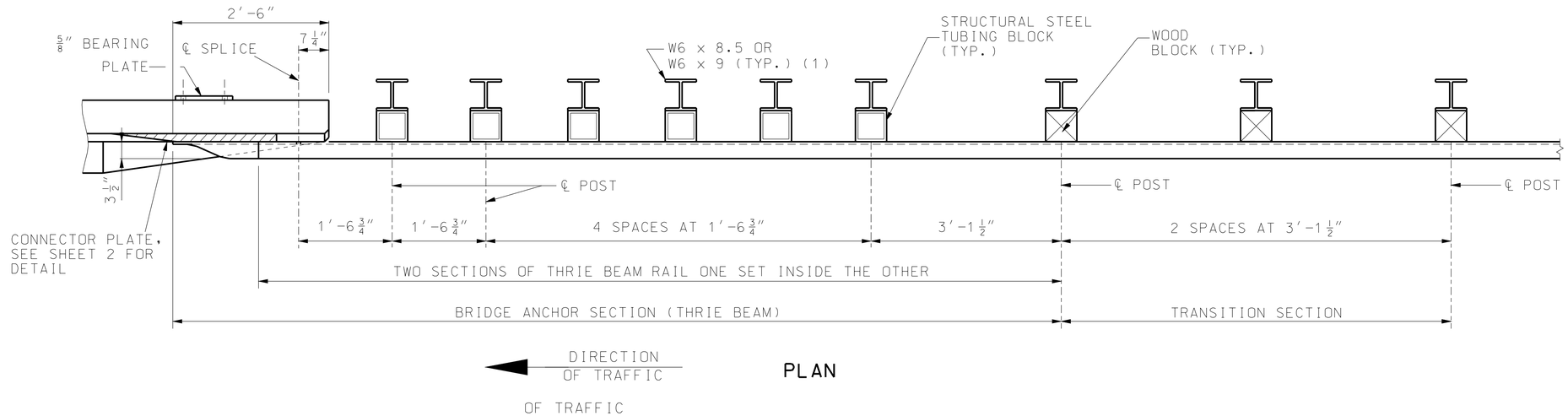

PLAN

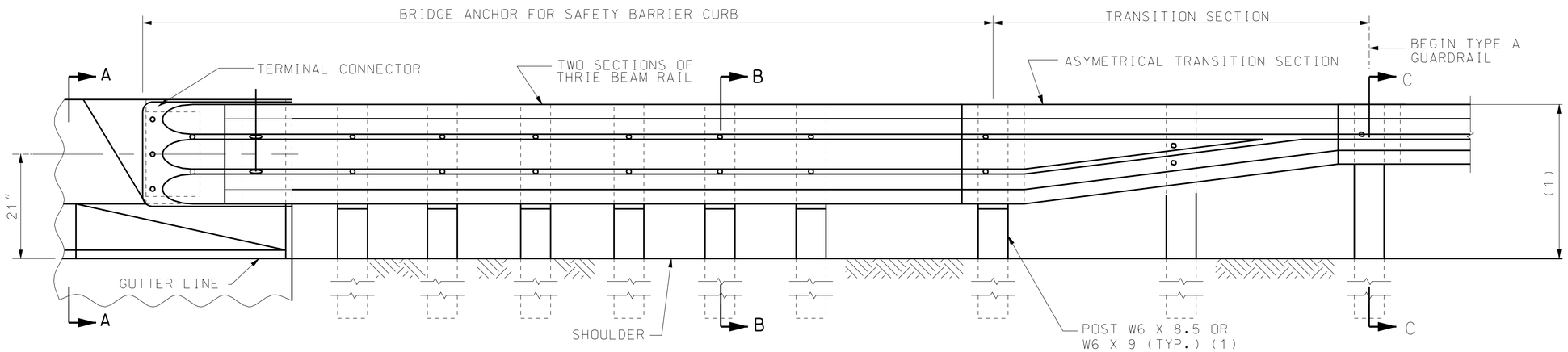

PART SECTION THRU SLAB AT END OF WING

(1) TRANSITION FROM 31″ TO 29″ HEIGHT OVER NEXT EIGHT UPSTREAM 12.5′ W-BEAMS.

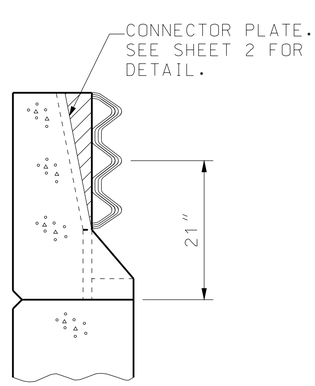

SECTION A-A

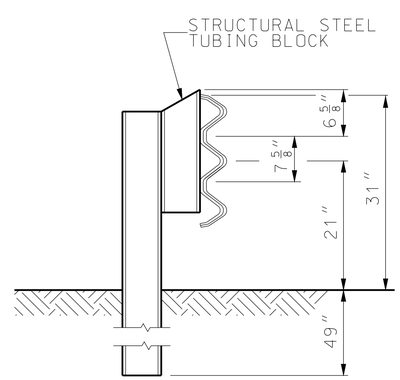

SECTION B-B

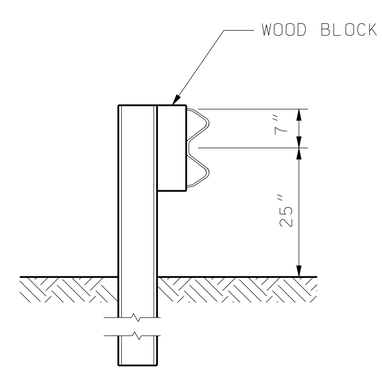

SECTION C-C

MISSOURI HIGHWAYS AND TRANSPORTATION COMMISSION
105 WEST CAPITOL
JEFFERSON CITY, MO 65102
1-888-ASK-MODOT (1-888-275-6636)

STATE OF MISSOURI
KATHRYN PHILLIPS HARVEY
NUMBER PE-23751
PROFESSIONAL ENGINEER
THIS SHEET HAS BEEN SIGNED, SEALED AND DATED ELECTRONICALLY.

BRIDGE ANCHOR SECTION

SAFETY BARRIER CURB ON BRIDGE

DATE EFFECTIVE: 08/01/2012
DATE PREPARED: 11/26/2012

606.22T

SHEET NO. 1 OF 5

IF A SEAL IS PRESENT ON THIS SHEET IT HAS BEEN ELECTRONICALLY SEALED AND DATED.