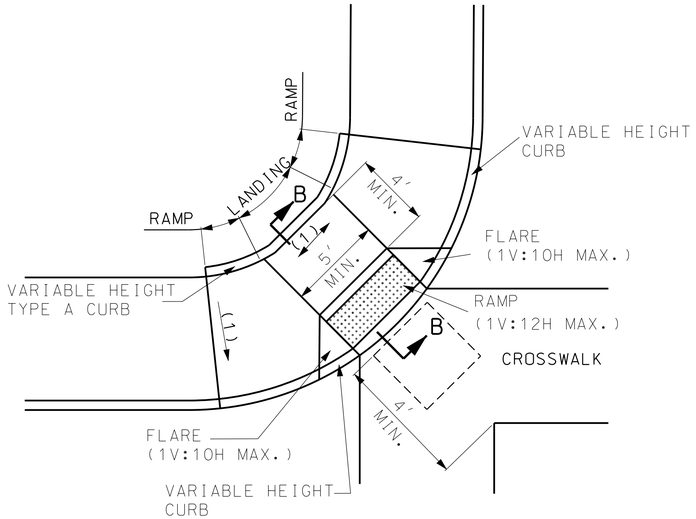

COMPOUND DIAGONAL

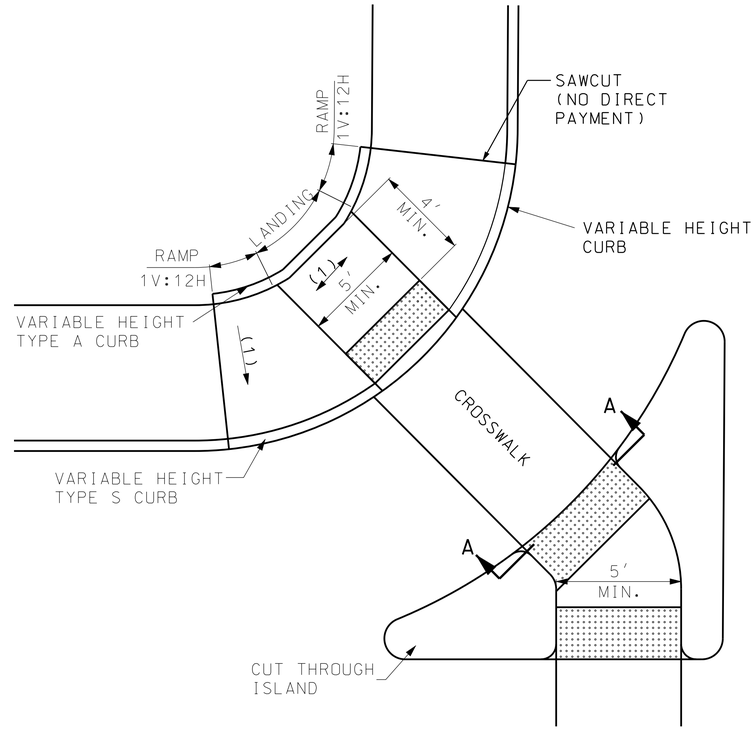

DIAGONAL WITH ISLAND

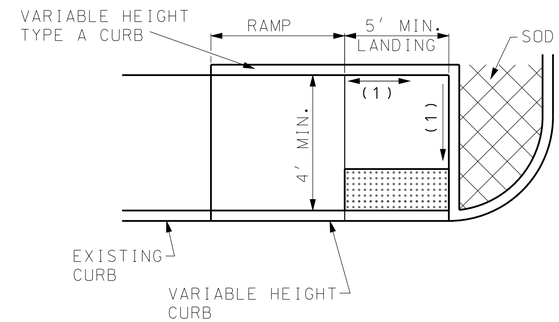

PARALLEL
CHANGING DIRECTION

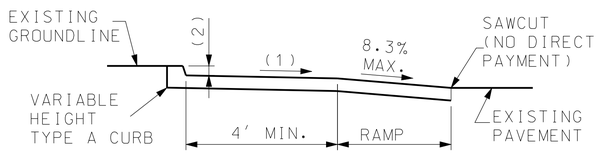

SECTION B-B

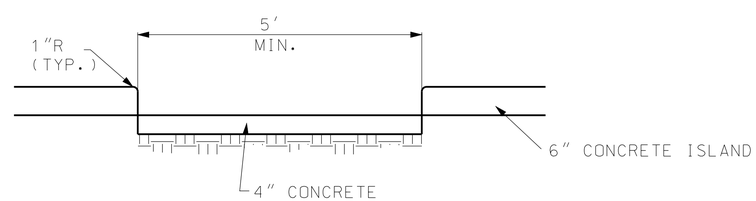

SECTION A-A
ISLAND CUT THROUGH TYPICAL

RAMP OR CUT-THROUGH DEPENDING ON ISLAND WIDTH. IF RAMPED, PROVIDE 4′ MINIMUM LANDING AND SLOPE RAMPS AT 1V:12H MAX.

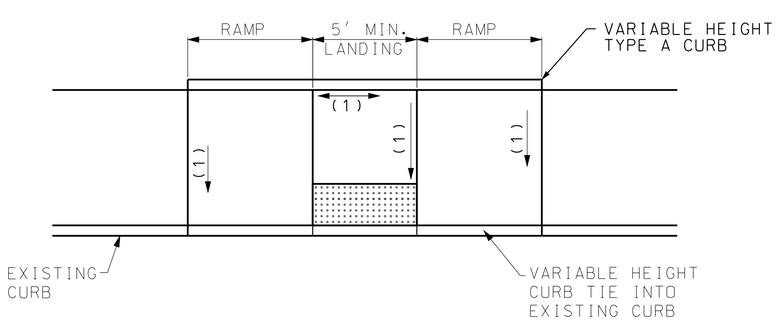

PARALLEL

(1) 1.0% MIN.
2.0% MAX.
(2) HEIGHT VARIES MEET EXISTING GROUND

MISSOURI HIGHWAYS AND TRANSPORTATION COMMISSION
105 WEST CAPITOL
JEFFERSON CITY, MO 65102
1-888-ASK-MODOT (1-888-275-6636)

STATE OF MISSOURI
KATHRYN PHILLIPS HARVEY
NUMBER PE-23751
PROFESSIONAL ENGINEER
THIS SHEET HAS BEEN SIGNED, SEALED AND DATED ELECTRONICALLY.

CONCRETE SIDEWALK AND CURB RAMPS

DATE EFFECTIVE: 10/01/2009
DATE PREPARED: 3/9/2011

608.10N

SHEET NO. 4 OF 4

IF A SEAL IS PRESENT ON THIS SHEET IT HAS BEEN ELECTRONICALLY SEALED AND DATED.