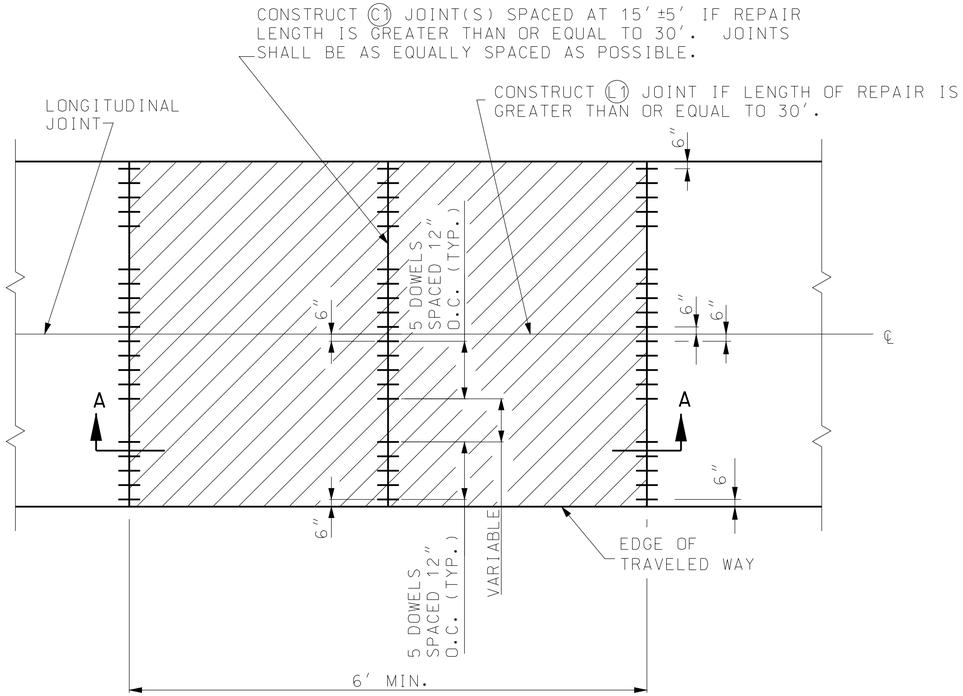

TWO OR MORE LANES

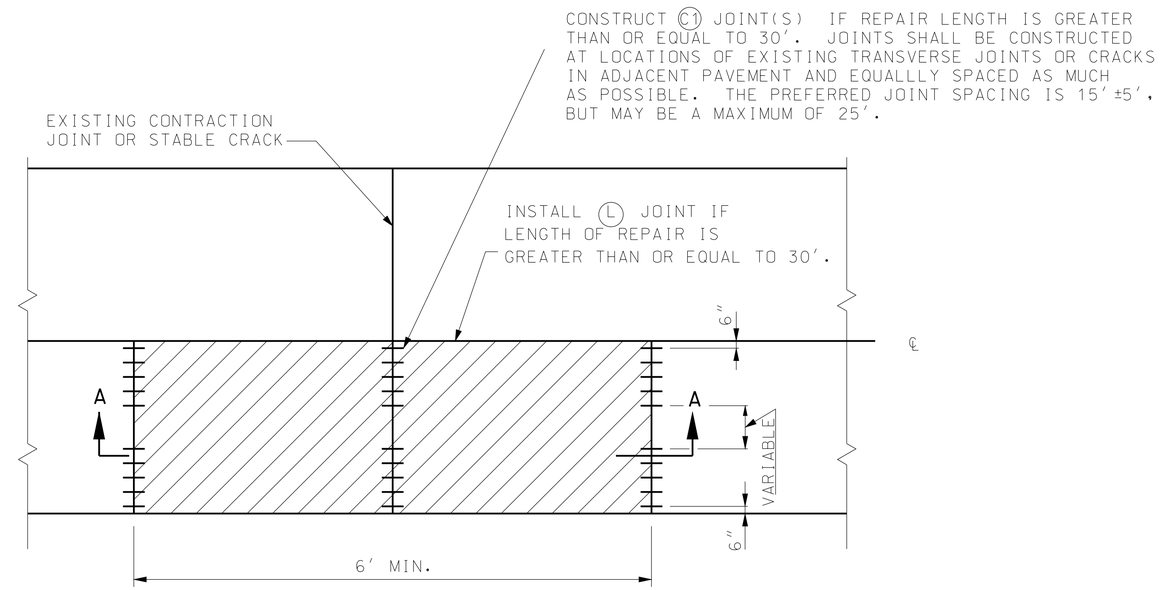

ONE LANE

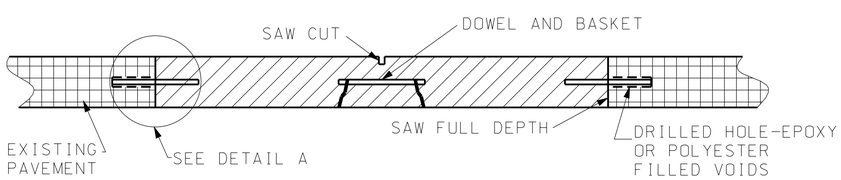

SECTION A-A

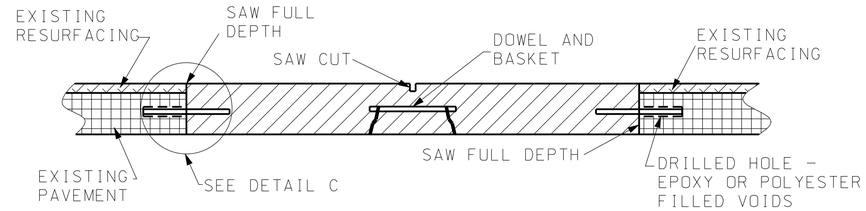

SECTION A-A ALTERNATE WITH ASPHALT OVERLAY

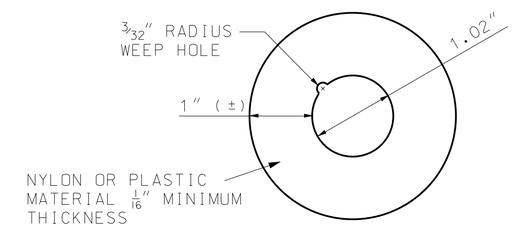

DETAIL B
THIN CIRCULAR DISK

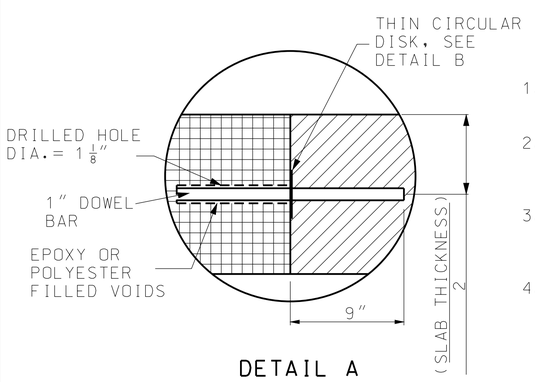

DETAIL A

1. SMOOTH EPOXY COATED DOWELS SHALL BE USED IN ALL FULL DEPTH PAVEMENT REPAIR TRANSVERSE JOINTS.
2. THE ANCHORING MATERIAL (EPOXY OR POLYESTER) SHALL BE PLACED TO THE BACK OF THE PREDRILLED HOLE BEFORE INSERTING THE DOWEL BAR.
3. THE DOWEL IS INSERTED INTO THE HOLE WITH A TWISTING MOTION SO THAT THE MATERIAL IN THE BACK OF THE HOLE IS FORCED UP AND AROUND THE BAR.
4. EXPOSED END OF DOWEL SHALL BE COATED WITH A THIN UNIFORM COAT OF GRAPHITE GREASE. DOWEL BASKET ASSEMBLIES SHALL BE CONSTRUCTED IN ACCORDANCE WITH STANDARD PLAN 502.10. IN LIEU OF GRAPHITE GREASE, THE DOWEL BAR BASKET SUPPLIER MAY PROVIDE COMPLETED BASKET UNITS PRE-DIPPED IN AN APPROVED BONDBREAKER.
5. REPAIR ONLY ONE LANE AT A TIME.

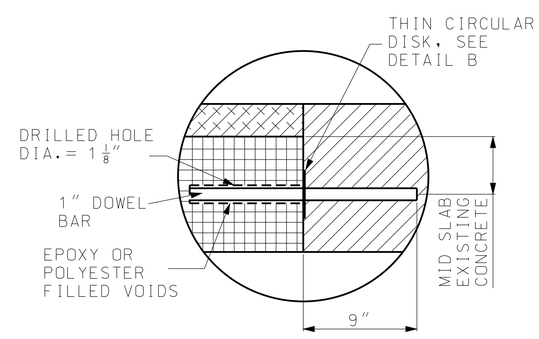

DETAIL C

GENERAL NOTES:

ALL SAW CUTS SHALL BE MADE WITH A DIAMOND SAW EXCEPT THE CENTER RELIEF CUT.

FOR DETAILS OF TYPE C, L AND L1 JOINTS. SEE STANDARD PLAN 502.05.

NON-REINFORCED AND REINFORCED PORTLAND CEMENT CONCRETE

MISSOURI HIGHWAYS AND TRANSPORTATION COMMISSION
105 WEST CAPITOL
JEFFERSON CITY, MO 65102
1-888-ASK-MODOT (1-888-275-6636)

STATE OF MISSOURI
KATHRYN PHILLIPS HARVEY
NUMBER PE-23751
PROFESSIONAL ENGINEER
THIS SHEET HAS BEEN SIGNED, SEALED AND DATED ELECTRONICALLY.

PAVEMENT REPAIR
FULL DEPTH

DATE EFFECTIVE: 06/01/2010
DATE PREPARED: 4/1/2010

613.00P

SHEET NO. 1 OF 3

IF A SEAL IS PRESENT ON THIS SHEET IT HAS BEEN ELECTRONICALLY SEALED AND DATED.