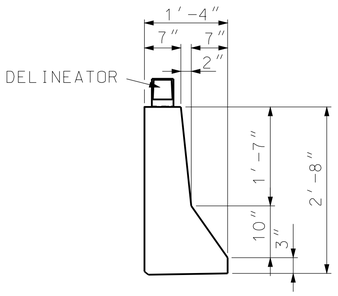

TYPE B (MODIFIED)
TYPICAL SECTION

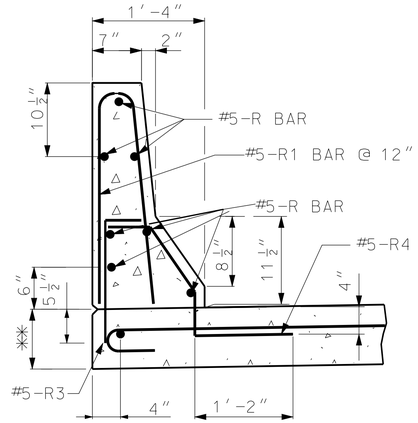

PART SECTION THROUGH
UPPER BARRIER

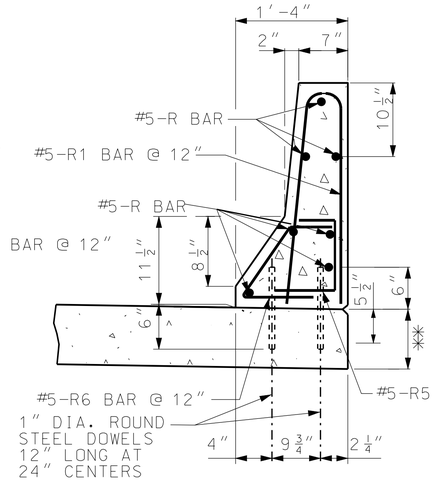

PART SECTION THROUGH
LOWER BARRIER

END HOOK DIMENSIONS				
BAR SIZE	D (IN.)	ALL GRADES		
		180° HOOKS		90° HOOKS
		A OR G	J	A OR G
#5	3¾″	7″	5″	10″
#6	4½″	8″	6″	12″

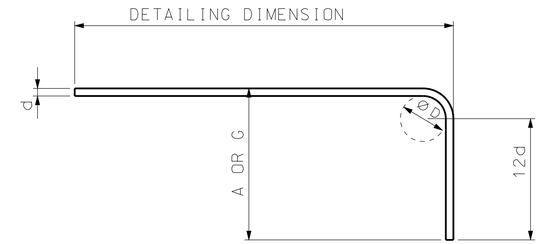

90° HOOKS

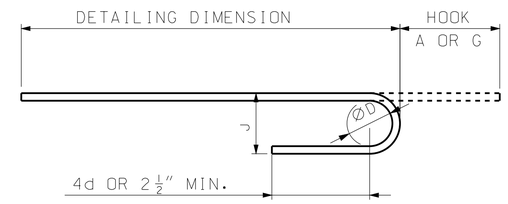

180° HOOKS

ALL STANDARD HOOKS AND BENDS OTHER THAN 180° TO BE BENT WITH THE SAME PROCEDURE AS FOR 90° STANDARD HOOKS.

TABLE A TRANSVERSE PAVEMENT REINFORCEMENT	
PAVEMENT THICKNESS **	BAR SIZE & SPACING
8″	#5 @ 5″
9″	#5 @ 6″
10″	#5 @ 8″
11″	#5 @ 9″
≥ 12″	#6 @ 12″

NOTES:

ALL REINFORCING STEEL SHALL BE EPOXY COATED.

NO DIRECT PAYMENT WILL BE MADE FOR REINFORCING STEEL.

MINIMUM CLEARANCE TO REINFORCING STEEL SHALL BE 1½″, UNLESS OTHERWISE SHOWN.

** SEE ROADWAY PAVEMENT DESIGN.

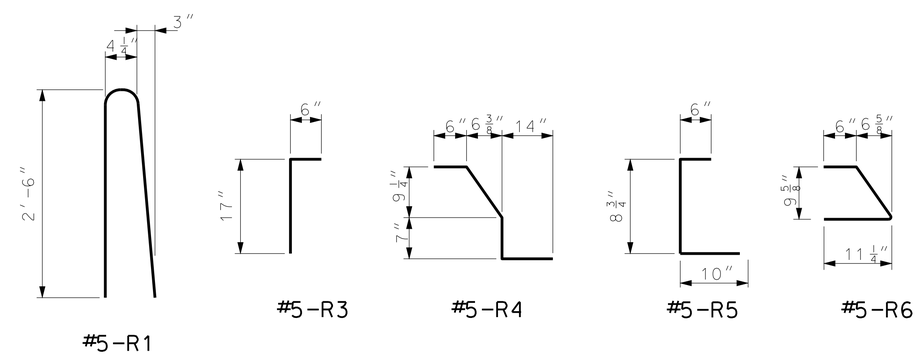

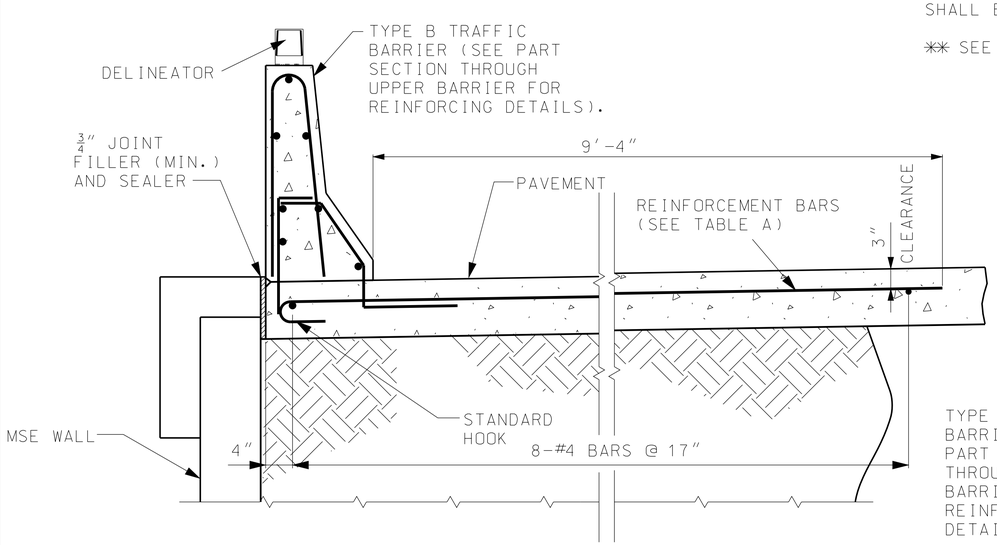

TYPE B TRAFFIC BARRIER ON TOP OF MSE WALL

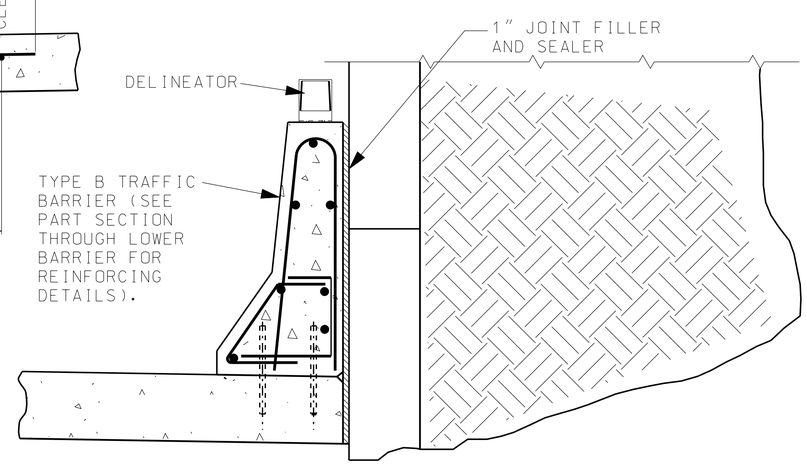

TYPE B TRAFFIC BARRIER AT THE SIDE OF MSE WALL

NOTES:

TYPE B (MODIFIED) SHALL BE USED ONLY AT LOCATIONS SHOWN IN PLANS.

FOR DELINEATOR DETAILS, SEE SHEET 1.

MISSOURI HIGHWAYS AND TRANSPORTATION COMMISSION
105 WEST CAPITOL
JEFFERSON CITY, MO 65102
1-888-ASK-MODOT (1-888-275-6636)

STATE OF MISSOURI
KATHRYN PHILLIPS HARVEY
NUMBER PE-23751
PROFESSIONAL ENGINEER
THIS SHEET HAS BEEN SIGNED, SEALED AND DATED ELECTRONICALLY.

PERMANENT CONCRETE TRAFFIC BARRIER
AT MSE WALL
TYPE B MODIFIED

DATE EFFECTIVE: 08/01/2012
DATE PREPARED: 7/19/2012

617.10H

IF A SEAL IS PRESENT ON THIS SHEET IT HAS BEEN ELECTRONICALLY SEALED AND DATED.