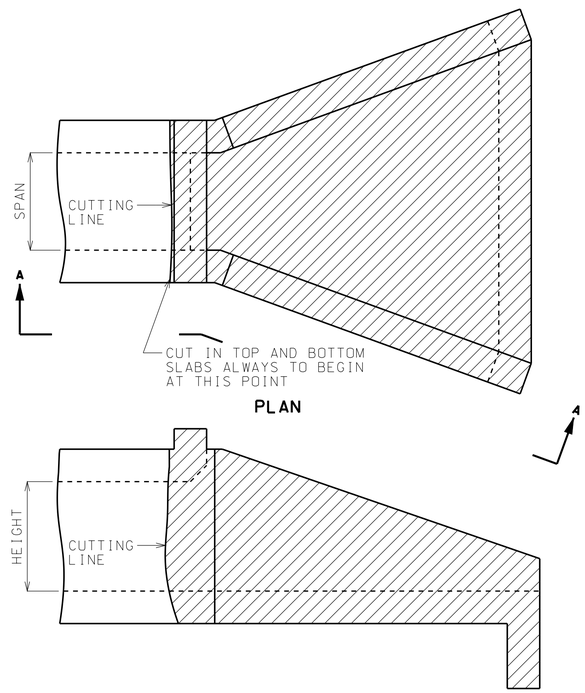

ELEVATION A-A

NO SKEW

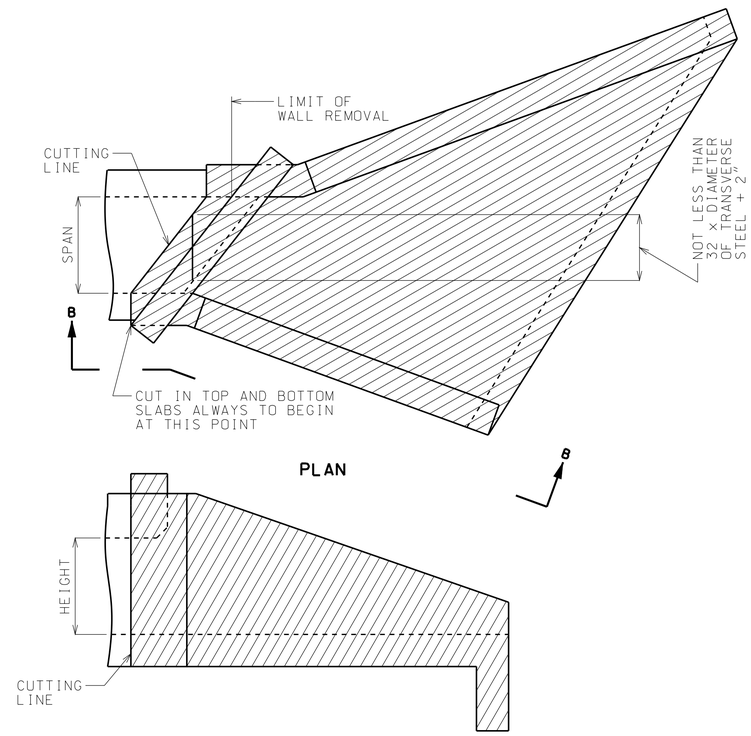

ELEVATION B-B

SKEWS OF 20° OR MORE

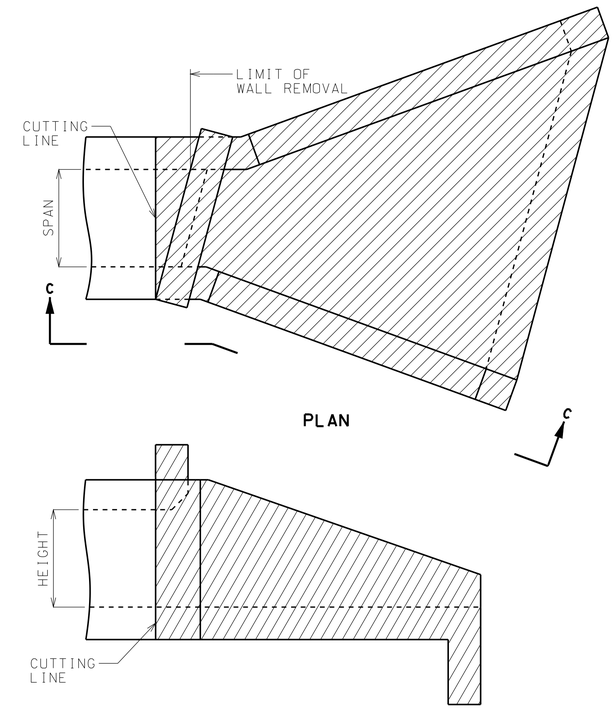

ELEVATION C-C

SKEWS LESS THAN 20°

GENERAL NOTES:

THE HATCHED PARTS OF THESE DRAWINGS INDICATE THOSE PORTIONS OF THE EXISTING CULVERT WHICH ARE TO BE REMOVED.

ALL REINFORCING BARS WITHIN AREAS SHOWN TO BE REMOVED, THAT ARE BONDED IN UNDISTURBED OLD CONCRETE, SHALL BE CLEANLY STRIPPED, STRAIGHTENED, AND EXTENDED INTO NEW CONCRETE.

SEE STANDARD SPECIFICATIONS FOR REQUIRED BUSHHAMMERING AND TREATING OF OLD CONCRETE SURFACES WHICH ARE TO RECEIVE NEW CONCRETE.

A CONTINUOUS V-GROOVE AT LEAST 1" IN DEPTH SHALL BE CUT ON THE FACE OF THE CONCRETE AS A GUIDE FOR THE LINE OF BREAK AND TO PREVENT SPALLING.

THE BOX EXTENSION OPENING SHALL BE BUILT TO MATCH THE EXISTING BOX OPENING. WHEN THE EXISTING OPENING DOES NOT MATCH A SIZE FROM THE TABLES, THE NEXT LARGER SIZE SHALL BE USED FOR DETERMINING THE MEMBER SIZES AND REINFORCEMENT.

MISSOURI HIGHWAYS AND TRANSPORTATION COMMISSION
105 WEST CAPITOL
JEFFERSON CITY, MO 65102
1-888-ASK-MODOT (1-888-275-6636)

STATE OF MISSOURI
DENNIS W. HECKMAN
NUMBER PE-27141
PROFESSIONAL ENGINEER

THIS SHEET HAS BEEN SIGNED, SEALED AND DATED ELECTRONICALLY.

CONCRETE BOX CULVERTS

CUTTING DETAILS EXTENSION TO FLARED WINGS

DATE EFFECTIVE: 10-01-2009
DATE PREPARED: 8/18/2009

703.38A

SHEET NO. 2 OF 2

IF A SEAL IS PRESENT ON THIS SHEET IT HAS BEEN ELECTRONICALLY SEALED AND DATED.