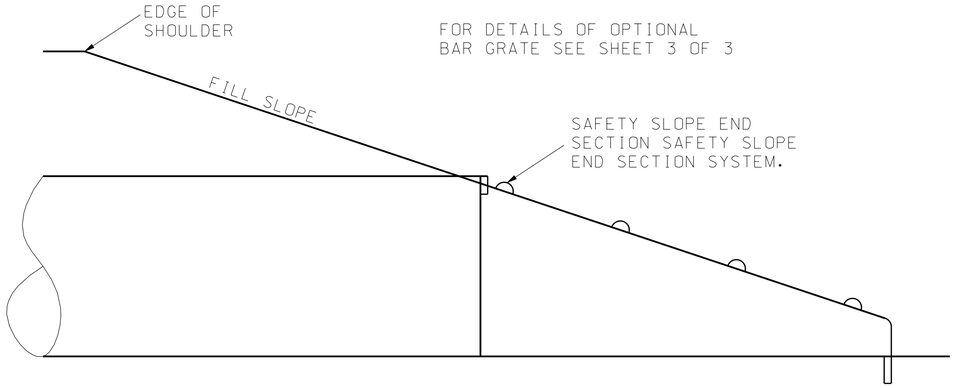


FOR DETAILS OF OPTIONAL BAR GRATE SEE SHEET 3 OF 3

## PIPE END DETAILS FOR DRAINAGE STRUCTURES

(SINGLE PIPE INSTALLATION)

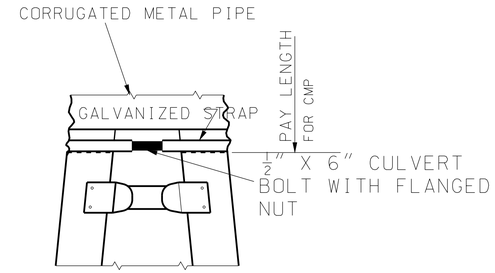


FOR 15" THRU 24" PIPE

## TYPE #1 CONNECTOR DETAIL

NOTE:
SEE DRIVEWAY STANDARD PLANS FOR BEVELED END SECTION REQUIREMENT.

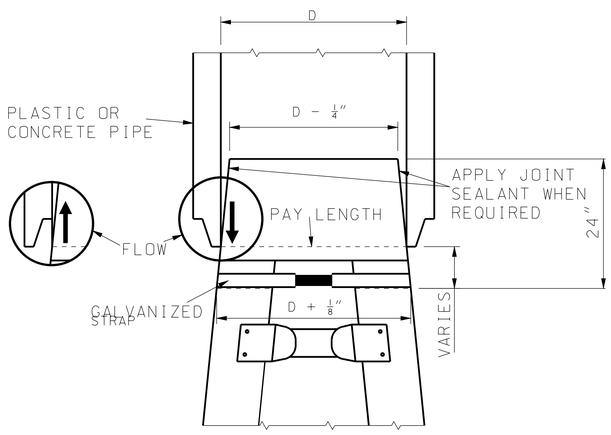


TAPERED SLEEVE SHALL BE FABRICATED FROM SMOOTH COATED STEEL IN ACCORDANCE WITH AASHTO M-218.

TAPERED SLEEVE SHALL BE 12 GAUGE.

## TAPERED SLEEVE FOR CONNECTION FOR CONCRETE, OR CORRUGATED POLYETHELENE PIPE

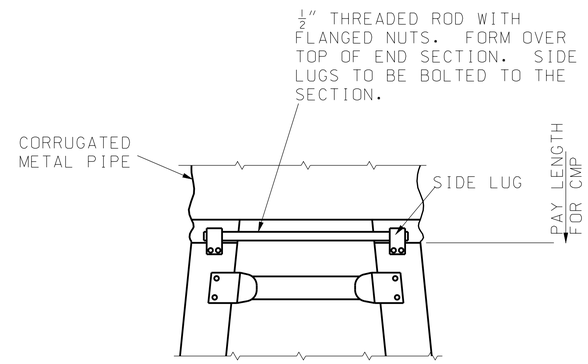


FOR 30" AND LARGER ROUND PIPES

## TYPE #2 CONNECTOR DETAIL

NOTE:
TAPERED SLEEVE SHALL BE FIRMLY WEDGED INTO PIPE END BEFORE BACKFILLING PIPE PAY LENGTH.

METAL END SECTIONS FOR CIRCULAR PIPES

| PIPE DIA. (IN.) | MIN. GAUGE ENDS (IN.) 4:1 & 6:1 | MIN. GAUGE ENDS (IN.) 10:1 | DIMENSIONS IN INCHES A 1" TOL. | H 1" TOL. | W 2" TOL. | OVERALL WIDTH | L DIMENSIONS SLOPE | LENGTH (IN.) | SLOPE | LENGTH (IN.) | SLOPE | LENGTH (IN.) |
|---|---|---|---|---|---|---|---|---|---|---|---|---|
| 15 | 16 | 12 | 8 | 6 | 21 | 37 | 4:1 | 20 | 6:1 | 30 | 10:1 | 70 |
| 18 | 16 | 12 | 8 | 6 | 24 | 40 | 4:1 | 32 | 6:1 | 48 | 10:1 | 100 |
| 21 | 16 | 12 | 8 | 6 | 27 | 43 | 4:1 | 44 | 6:1 | 66 | 10:1 | 130 |
| 24 | 16 | 12 | 8 | 6 | 30 | 46 | 4:1 | 56 | 6:1 | 84 | 10:1 | 160 |
| 30 | 12 | | 12 | 9 | 36 | 60 | 4:1 | 80 | 6:1 | 120 | 10:1 | 220 |
| 36 | 12 | | 12 | 9 | 42 | 66 | 4:1 | 104 | 6:1 | 156 | 10:1 | 280 |
| 42 | 12 | | 16 | 12 | 48 | 80 | 4:1 | 128 | 6:1 | 192 | | |
| 48 | 12 | | 16 | 12 | 54 | 86 | 4:1 | 152 | 6:1 | 228 | | |
| 54 | 12 | | 16 | 12 | 60 | 92 | 4:1 | 176 | 6:1 | 264 | | |
| 60 | 12 | | 16 | 12 | 66 | 98 | 4:1 | 200 | 6:1 | 300 | | |

MISSOURI HIGHWAYS AND TRANSPORTATION COMMISSION
105 WEST CAPITOL
JEFFERSON CITY, MO 65102
1-888-ASK-MODOT (1-888-275-6636)

STATE OF MISSOURI
KATHRYN PHILLIPS HARVEY
NUMBER PE-23751
PROFESSIONAL ENGINEER
THIS SHEET HAS BEEN SIGNED, SEALED AND DATED ELECTRONICALLY.

# SAFETY SLOPE END SECTION

DATE EFFECTIVE: 08/01/2009
DATE PREPARED: 6/15/2009

732.10G

SHEET NO. 2 OF 3

IF A SEAL IS PRESENT ON THIS SHEET IT HAS BEEN ELECTRONICALLY SEALED AND DATED.