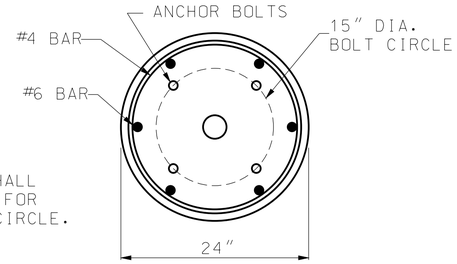

ANCHOR BOLTS SHALL BE PLACED ONLY FOR 15″ DIA. BOLT CIRCLE.

PLAN

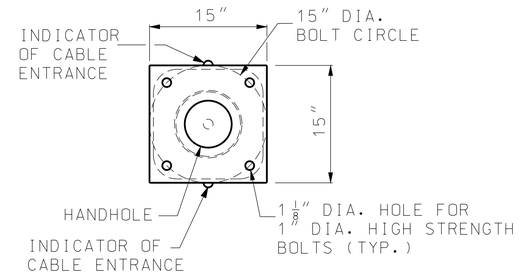

PLAN

DRIVE HOLES WILL BE PERMITTED PROVIDED THAT THEY DO NOT CONFLICT WITH OR COMPROMISE THE STRUCTURAL INTEGRITY OF THE PLATE, THE WELD BETWEEN THE PLATE AND SHAFT, OR THE BOLT HOLES.

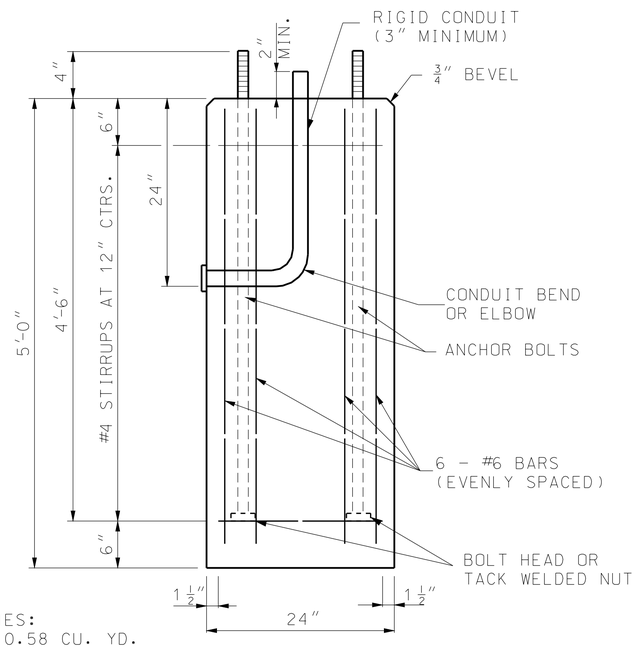

QUANTITIES:
CONC. = 0.58 CU. YD.
REIN. = 64 LBS.

ELEVATION

DETAILS OF CONCRETE FOUNDATION ③

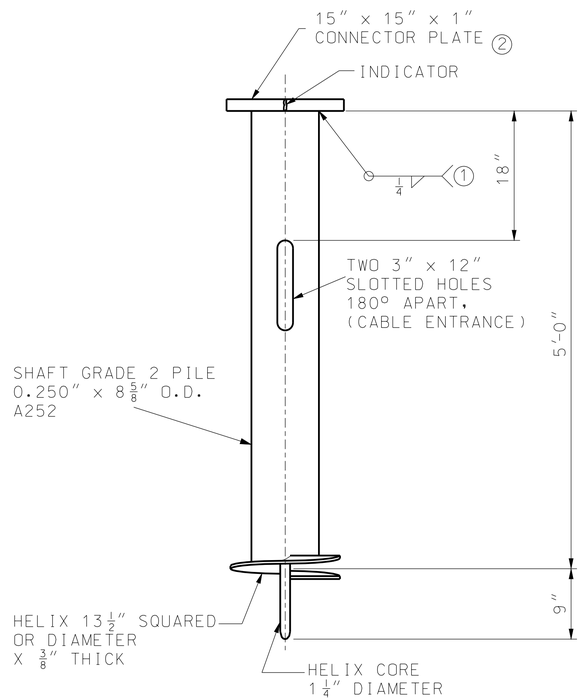

ELEVATION

DETAILS OF SCREW ANCHOR FOUNDATION

NOTES:

1. GRIND WELD AS NECESSARY TO CLEAR BOLT HEAD.
2. FOUNDATIONS SHALL BE INSTALLED SO THAT CONNECTOR PLATES ARE LEVEL PERPENDICULAR TO THE BRACKET ARM AND SLOPED FOR POLE RAKING PARALLEL TO THE BRACKET ARM.
3. AT THE OPTION OF THE CONTRACTOR THE CONCRETE FOUNDATION MAY BE PRECAST. IF PRECAST, THEY SHALL BE SET IN DRILLED HOLES 3 FEET IN DIAMETER AND 6 INCHES DEEPER THAN THE BOTTOM OF THE CONCRETE FOUNDATION. THE BOTTOM 6 INCHES OF THE HOLE AND THE REMAINING SPACE AROUND THE FOUNDATION SHALL BE BACKFILLED WITH WET TAMPED LIMESTONE SCREENINGS IN LAYERS NOT EXCEEDING 12 INCHES.

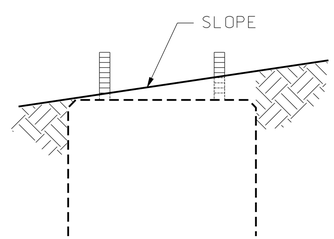

CONCRETE FOUNDATION EMBEDMENT

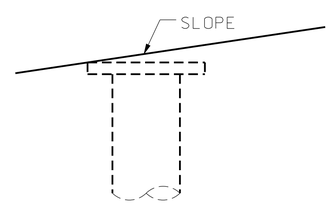

SCREW ANCHOR EMBEDMENT

GENERAL NOTES:

ALL CLASSIFICATIONS ARE ASTM UNLESS OTHERWISE NOTED. SEE STANDARD SPECIFICATIONS FOR CLASSIFICATIONS NOT SHOWN.

ALL CONNECTOR PLATE AND CLOSURE PLATE THICKNESSES SHOWN ARE MINIMUM DIMENSIONS.

ALL ANCHOR BOLTS SHALL BE FULLY GALVANIZED 1″ DIA. HIGH STRENGTH ANCHOR BOLTS.

ALL STEEL COMPONENTS SHALL BE HOT DIP GALVANIZED.

MISSOURI HIGHWAYS AND TRANSPORTATION COMMISSION
105 WEST CAPITOL
JEFFERSON CITY, MO 65102
1-888-ASK-MODOT (1-888-275-6636)

STATE OF MISSOURI
KATHRYN PHILLIPS HARVEY
NUMBER PE-23751
PROFESSIONAL ENGINEER
THIS SHEET HAS BEEN SIGNED, SEALED AND DATED ELECTRONICALLY.

HIGHWAY LIGHTING

POLES, FOUNDATIONS AND APPURTENANCES FOR 30′ MOUNTING HEIGHT

DATE EFFECTIVE: 02/01/2011 DATE PREPARED: 12/8/2010	901.00Z	SHEET NO. 4 OF 4	

IF A SEAL IS PRESENT ON THIS SHEET IT HAS BEEN ELECTRONICALLY SEALED AND DATED.