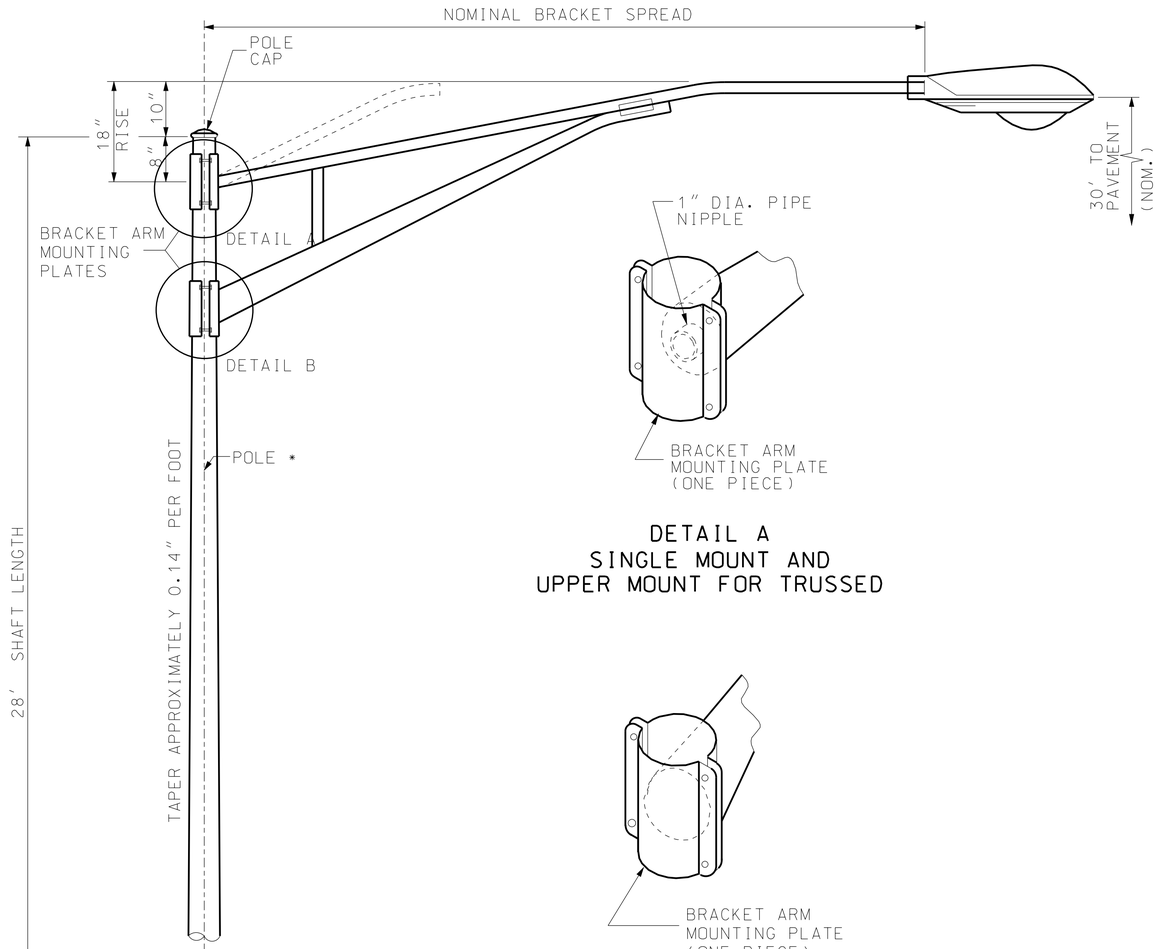

DETAIL A
SINGLE MOUNT AND
UPPER MOUNT FOR TRUSSED

DETAIL B
LOWER MOUNT FOR TRUSSED

TYPICAL BRACKET ARM MOUNTING

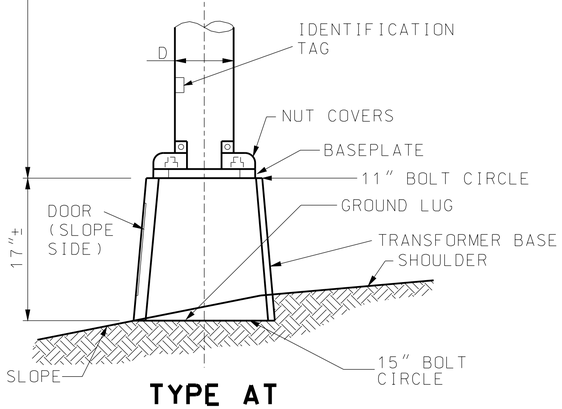

TYPE AT

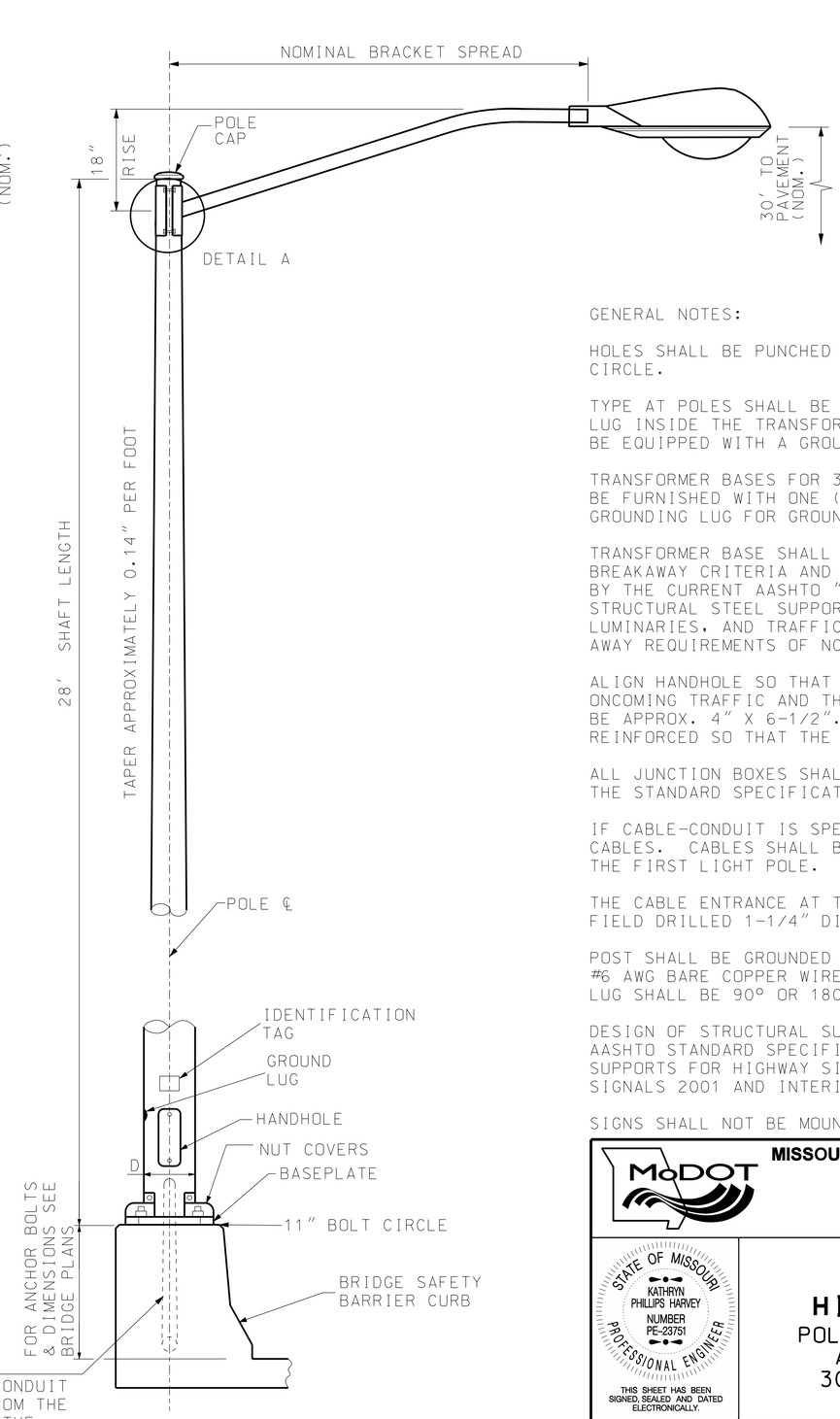

WIRES SHALL BE SPLICED AT FUSED CONNECTOR IN POLE BASE. IF CABLE-CONDUIT IS SPECIFIED, CUT CONDUIT AWAY FROM THE CABLES WHERE CABLE-CONDUIT ENTERS THE RIGID CONDUIT SYSTEM. (SEE DRAWING 901.02)

TYPE B

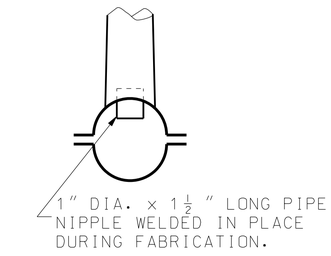

PLAN VIEW OF DETAIL A

GENERAL NOTES:

HOLES SHALL BE PUNCHED ONLY FOR SPECIFIED BOLT CIRCLE.

TYPE AT POLES SHALL BE EQUIPPED WITH THE GROUNDING LUG INSIDE THE TRANSFORMER BASE. TYPE B POLES SHALL BE EQUIPPED WITH A GROUNDING LUG INSIDE THE POLE.

TRANSFORMER BASES FOR 30 FOOT MOUNTING HEIGHT SHALL BE FURNISHED WITH ONE (1) DRILLED AND TAPPED HOLE AND GROUNDING LUG FOR GROUNDING EQUIPMENT.

TRANSFORMER BASE SHALL BE CERTIFIED AS MEETING THE BREAKAWAY CRITERIA AND STRUCTURAL REQUIREMENTS AS SET BY THE CURRENT AASHTO "STANDARD SPECIFICATIONS FOR STRUCTURAL STEEL SUPPORTS FOR HIGHWAY SIGNS, LUMINARIES, AND TRAFFIC SIGNALS" AND MEET THE BREAK-AWAY REQUIREMENTS OF NCHRP 350.

ALIGN HANDHOLE SO THAT THE POLE IS BETWEEN THE ONCOMING TRAFFIC AND THE HANDHOLE. HANDHOLE SHALL BE APPROX. 4" X 6-1/2". HANDHOLE FRAME SHALL BE REINFORCED SO THAT THE POLE STRENGTH IS NOT REDUCED.

ALL JUNCTION BOXES SHALL CONFORM TO SECTION 1062 OF THE STANDARD SPECIFICATIONS.

IF CABLE-CONDUIT IS SPECIFIED, CUT CONDUIT AWAY FROM CABLES. CABLES SHALL BE CONTINUOUS AND UNSPLICED TO THE FIRST LIGHT POLE.

THE CABLE ENTRANCE AT THE BRACKET ARM SHALL BE A FIELD DRILLED 1-1/4" DIAMETER HOLE.

POST SHALL BE GROUNDED FROM GROUND LUG IN POST WITH #6 AWG BARE COPPER WIRE TO CONDUIT SYSTEM. GROUND LUG SHALL BE 90° OR 180° FROM THE HANDHOLE.

DESIGN OF STRUCTURAL SUPPORTS SHALL COMPLY WITH AASHTO STANDARD SPECIFICATIONS FOR STRUCTURAL SUPPORTS FOR HIGHWAY SIGNS, LUMINAIRES AND TRAFFIC SIGNALS 2001 AND INTERIMS THROUGH 2003.

SIGNS SHALL NOT BE MOUNTED ON LIGHTING POLES.

MISSOURI HIGHWAYS AND TRANSPORTATION COMMISSION
105 WEST CAPITOL
JEFFERSON CITY, MO 65102
1-888-ASK-MODOT (1-888-275-6636)

STATE OF MISSOURI
KATHRYN PHILLIPS HARVEY
NUMBER PE-23751
PROFESSIONAL ENGINEER
THIS SHEET HAS BEEN SIGNED, SEALED AND DATED ELECTRONICALLY.

HIGHWAY LIGHTING

POLES, FOUNDATIONS AND APPURTENANCES FOR 30' MOUNTING HEIGHT

DATE EFFECTIVE:	02/01/2011	901.00Z	SHEET NO. 1 OF 4
DATE PREPARED:	12/8/2010		

IF A SEAL IS PRESENT ON THIS SHEET IT HAS BEEN ELECTRONICALLY SEALED AND DATED.