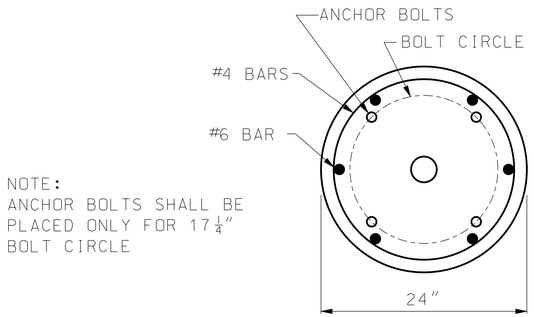

NOTE:
ANCHOR BOLTS SHALL BE PLACED ONLY FOR $17\frac{1}{4}$" BOLT CIRCLE

PLAN

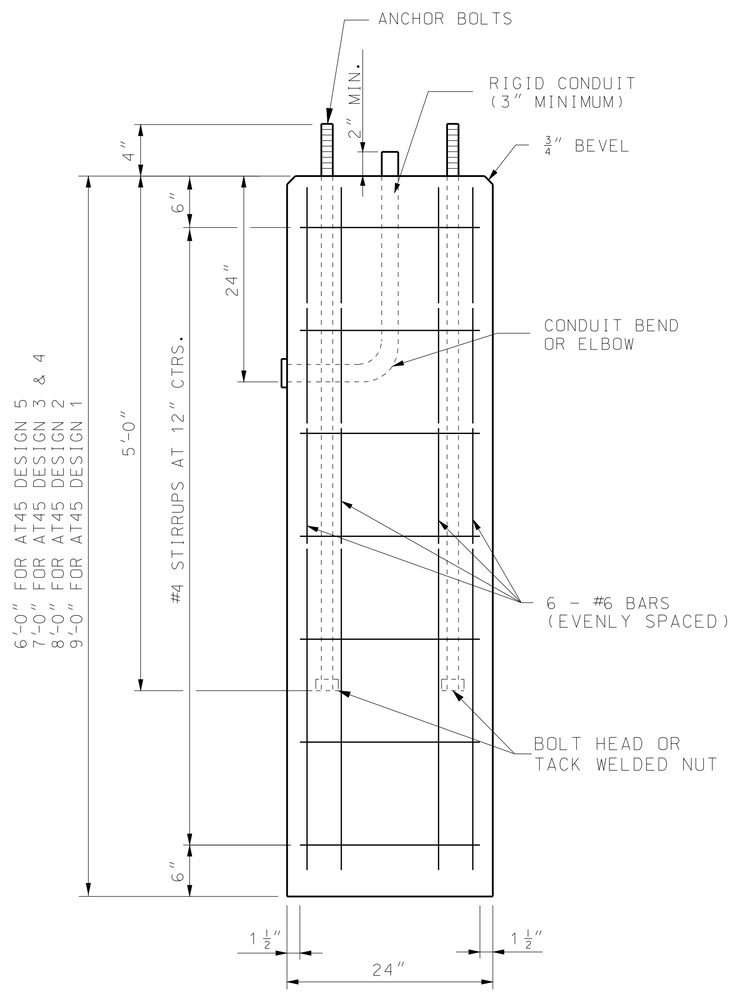

ELEVATION

DETAILS OF CONCRETE FOUNDATION (4)

(4) AT THE OPTION OF THE CONTRACTOR THE CONCRETE FOUNDATIONS MAY BE PRECAST. IF PRECAST, THEY SHALL BE SET IN DRILLED HOLES 3 FEET IN DIAMETER AND 6 INCHES DEEPER THAN THE BOTTOM OF THE CONCRETE FOUNDATION. THE BOTTOM 6 INCHES OF THE HOLE AND THE REMAINING SPACE AROUND THE FOUNDATION SHALL BE BACKFILLED WITH WET TAMPED LIMESTONE SCREENINGS IN LAYERS NOT EXCEEDING 12 INCHES.

QUANTITIES		
	CONC.	REINF.
HEIGHT	CU. YD.	LBS.
6'-0"	.70	80
7'-0"	.81	90
8'-0"	.93	104
9'-0"	1.05	120

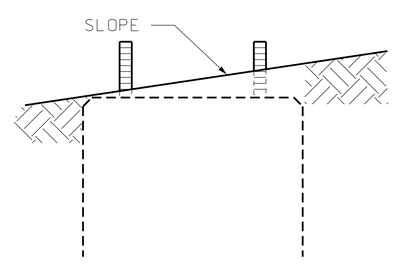

CONCRETE FOUNDATION EMBEDMENT

GENERAL NOTES:

ALL CLASSIFICATIONS ARE ASTM UNLESS OTHERWISE NOTED. SEE STANDARD SPECIFICATIONS FOR CLASSIFICATIONS NOT SHOWN.

ALL BOLT CIRCLES FOR 45' MOUNTING HEIGHT SHALL BE $17\frac{1}{4}$".

ALL CONECTOR PLATE AND CLOSURE PLATE THICKNESSES SHOWN ARE MINIMUM DIMENSIONS.

ALL ANCHOR BOLTS SHALL BE FULLY GALVANIZED $1\frac{1}{4}$" DIAMETER HIGH STRENGTH ANCHOR BOLTS.

ALL STEEL COMPONENTS SHALL BE HOT DIP GALVANIZED.

MISSOURI HIGHWAYS AND TRANSPORTATION COMMISSION
105 WEST CAPITOL
JEFFERSON CITY, MO 65102
1-888-ASK-MODOT (1-888-275-6636)

STATE OF MISSOURI
KATHRYN PHILLIPS HARVEY
NUMBER PE-23751
PROFESSIONAL ENGINEER
THIS SHEET HAS BEEN SIGNED, SEALED AND DATED ELECTRONICALLY.

HIGHWAY LIGHTING
POLES, FOUNDATIONS AND APPURTENANCES FOR 45' MOUNTING HEIGHT

DATE EFFECTIVE: 02/01/2011
DATE PREPARED: 12/8/2010

901.01AG

SHEET NO. 6 OF 6

IF A SEAL IS PRESENT ON THIS SHEET IT HAS BEEN ELECTRONICALLY SEALED AND DATED.