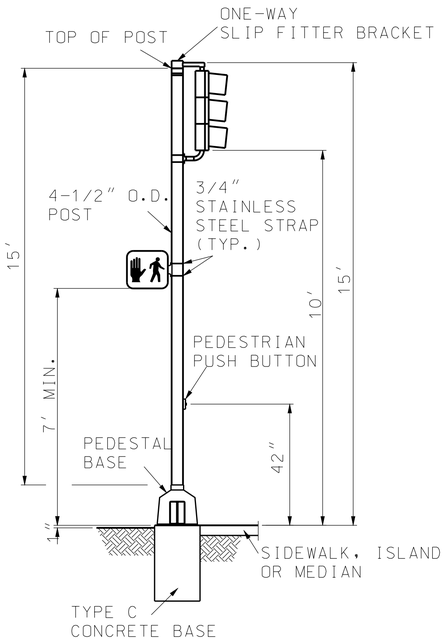

ONE FACE

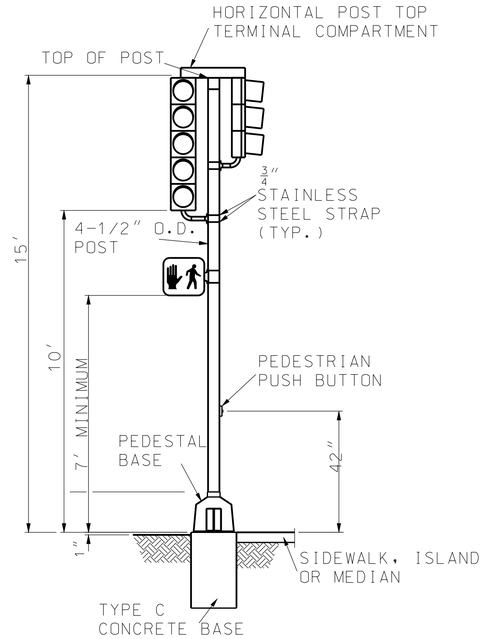

TWO FACE

PEDESTAL POST MOUNTINGS

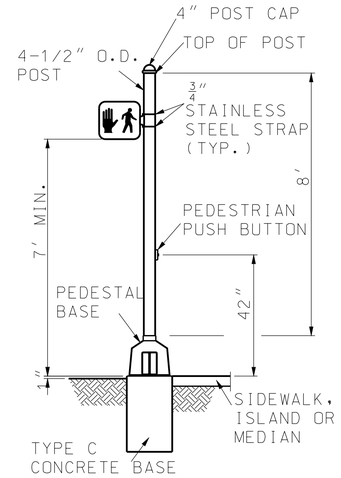

GENERAL NOTES:

ALL POST WIRE OUTLETS SHALL BE DEBURRED AND EQUIPPED WITH BUSHINGS.

BACKPLATES NOT SHOWN IN MOUNTING DIAGRAMS FOR CLARITY.

POSTS SHALL BE GROUNDED WITH #6 AWG BARE COPPER WIRE FROM GROUNDING BUSHING ON CONDUIT TO GROUNDING LUG IN POST BASE IF STEEL CONDUIT IS USED. IF PVC CONDUIT IS USED, PROVIDE #6 AWG BARE COPPER WIRE FROM GROUNDING LUG IN POST TO POWER SUPPLY GROUND BUSS IN CONTROLLER CABINET.

LEADS FROM PEDESTRIAN SIGNAL LAMPS ARE CONNECTED TO THE SIGNAL HEAD TERMINAL COMPARTMENT.

TYPE C MOUNTED SIGNALS SHALL HAVE A DISCONNECT HANGER.

TYPE B MOUNTED SIGNALS SHALL HAVE A TERMINAL COMPARTMENT.

ONE FACE, TOP-MOUNTED (TYPE T) OR SIDE-MOUNTED (TYPE S) SIGNALS HAVE NO TERMINAL COMPARTMENT.
TWO FACE, TOP-MOUNTED (TYPE T) OR SIDE-MOUNTED (TYPE S) SIGNALS SHALL HAVE A HORIZONTAL TERMINAL COMPARTMENT.

SIDE-MOUNTED OPTICALLY LIMITING HEADS SHALL HAVE A MINIMUM POST CLEARANCE OF 5-1/2".

SIGNAL APPURTENANCES SHALL HAVE A HORIZONTAL CLEARANCE NO LESS THAN 2' FROM THE FACE OF A VERTICAL CURB OR FROM THE OUTSIDE EDGE OF A SHOULDER, EXCEPT SIGNALS LOCATED IN A MEDIAN ISLAND.

SEE STANDARD PLAN 902.30 FOR BASE DETAILS AND CONDUIT LOCATIONS.

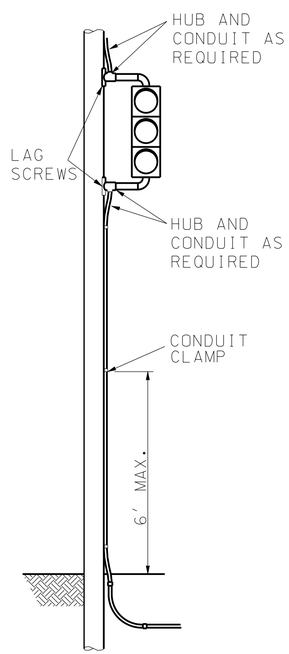

WOOD POLE MOUNTING

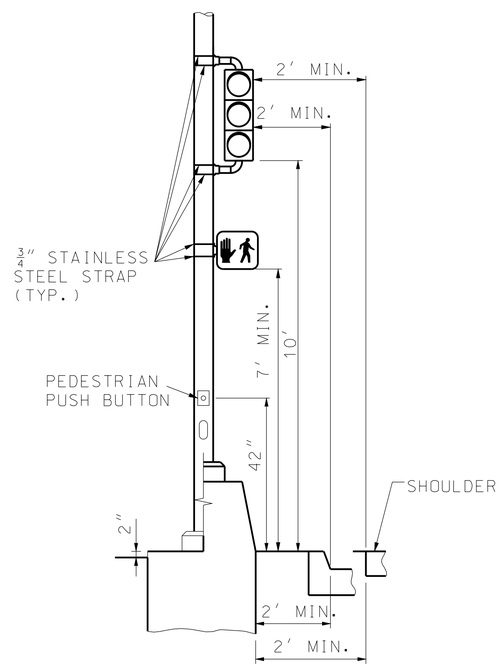

METAL POST MOUNTING

MISSOURI HIGHWAYS AND TRANSPORTATION COMMISSION
105 WEST CAPITOL
JEFFERSON CITY, MO 65102
1-888-ASK-MODOT (1-888-275-6636)

STATE OF MISSOURI
EILEEN H. RACKERS
NUMBER PE-28336
PROFESSIONAL ENGINEER
THIS SHEET HAS BEEN SIGNED, SEALED AND DATED ELECTRONICALLY.

TRAFFIC SIGNALS

SIGNAL HEAD MOUNTING

DATE EFFECTIVE: 04/01/2008
DATE PREPARED: 8/26/2009

902.00M

SHEET NO. 1 OF 2

IF A SEAL IS PRESENT ON THIS SHEET IT HAS BEEN ELECTRONICALLY SEALED AND DATED.