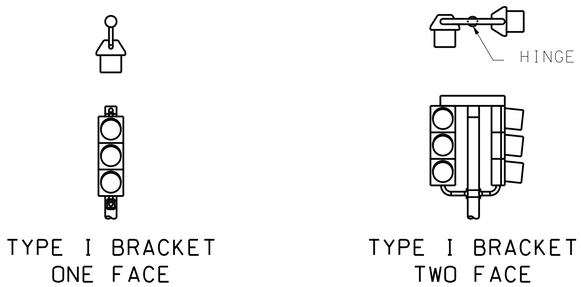

TOP-MOUNT (TYPE T)

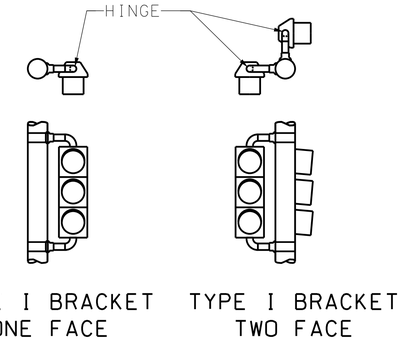

SIDE-MOUNT (TYPE S)

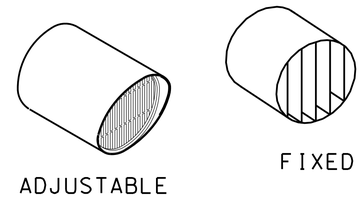

LOUVERS

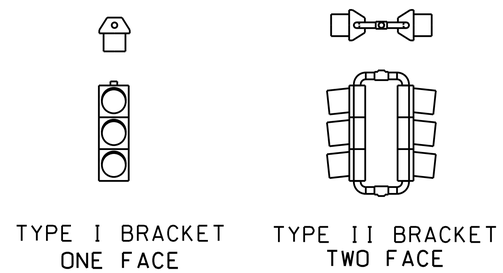

OVERHEAD SPANWIRE (TYPE C)

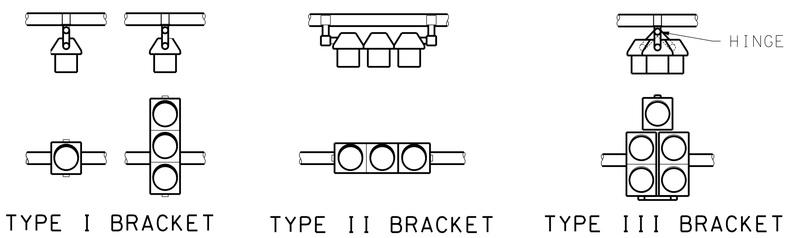

MAST ARM (TYPE B)

(SEE DRAWING 902.40)

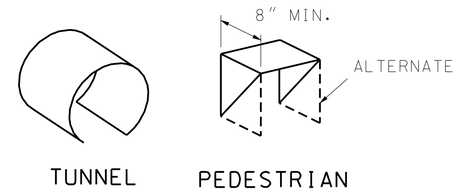

VISORS

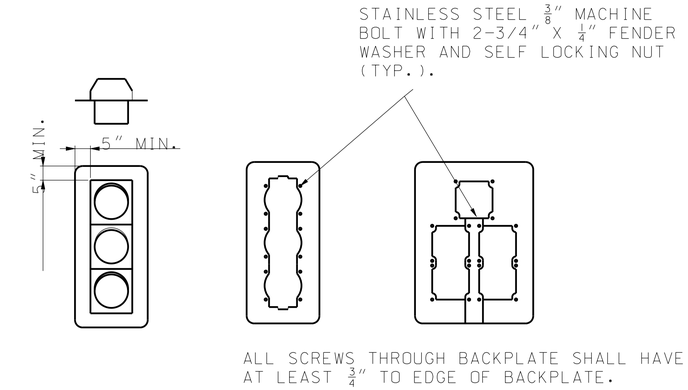

BACKPLATES

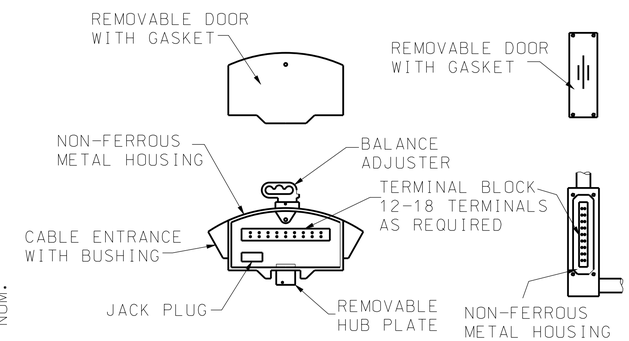

TERMINAL COMPARTMENT

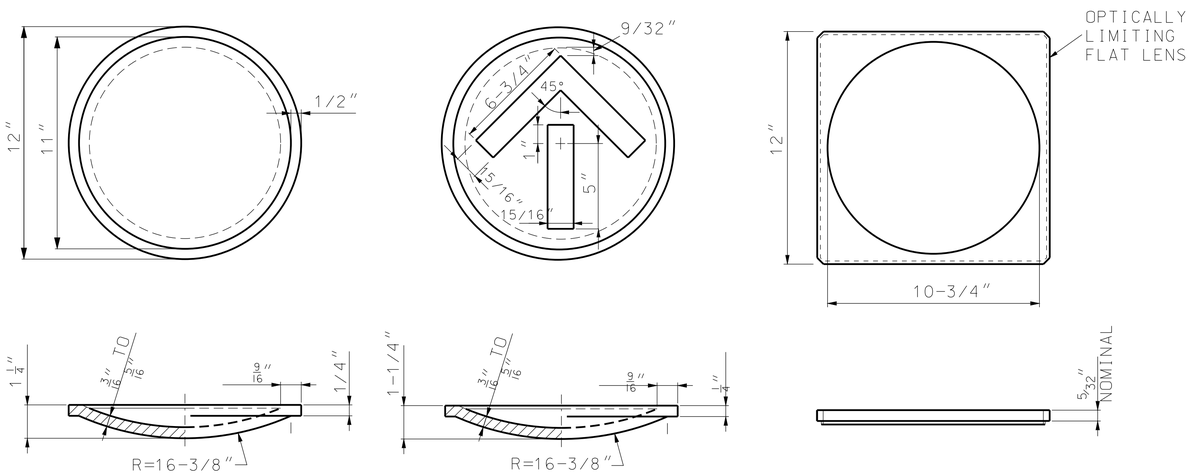

CONVENTIONAL CIRCULAR

CONVENTIONAL ARROW

OPTICALLY LIMITING

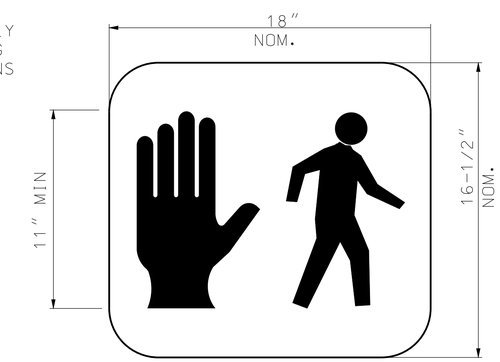

PEDESTRIAN

LENSES

IF A SEAL IS PRESENT ON THIS SHEET IT HAS BEEN ELECTRONICALLY SEALED AND DATED.

MISSOURI HIGHWAYS AND TRANSPORTATION COMMISSION
105 WEST CAPITOL
JEFFERSON CITY, MO 65102
1-888-ASK-MODOT (1-888-275-6636)

STATE OF MISSOURI
EILEEN H. RACKERS
NUMBER PE-28336
PROFESSIONAL ENGINEER
THIS SHEET HAS BEEN SIGNED, SEALED AND DATED ELECTRONICALLY.

TRAFFIC SIGNALS

SIGNAL HEAD LOUVERS, VISORS, BACKPLATES AND TERMINAL COMPARTMENT

DATE EFFECTIVE: 04/01/2008
DATE PREPARED: 8/26/2009

902.00M

SHEET NO. 2 OF 2