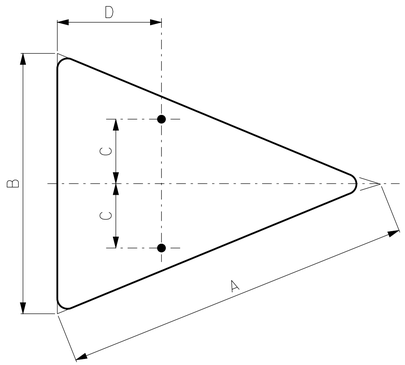

DIMENSIONS (IN.)			
A	B	C	D
40	30	7.5	12
48	36	9	15

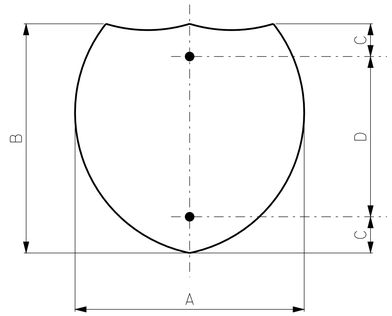

DIMENSIONS (IN.)			
A	B	C	D
24	24	3	18
30	24	3	18
36	36	6	24
45	36	6	24

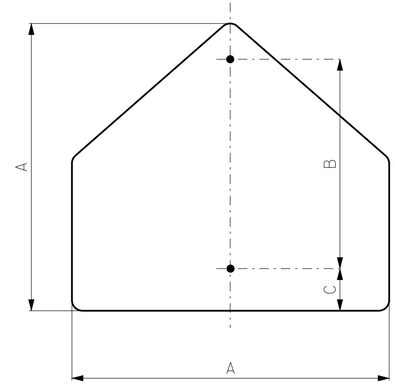

DIMENSIONS (IN.)		
A	B	C
36	24	3

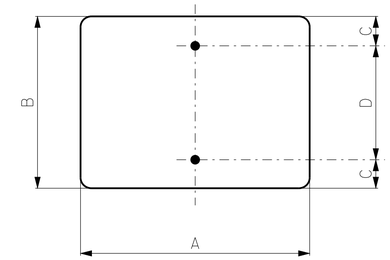

DIMENSIONS (IN.)			
A	B	C	D
5	9	1.5	6
12	9	1.5	6
14	12	1.5	9
18	12	1.5	9
20	9	1.5	6
21	15	1.5	12
24	6	1.5	3
24	8	1.5	5
24	10	1.5	7
24	12	1.5	9
24	18	3	12
30	6	1.5	3
30	12	1.5	9
30	15	1.5	12
30	18	3	12
30	24	3	18
36	12	1.5	9
36	18	3	12

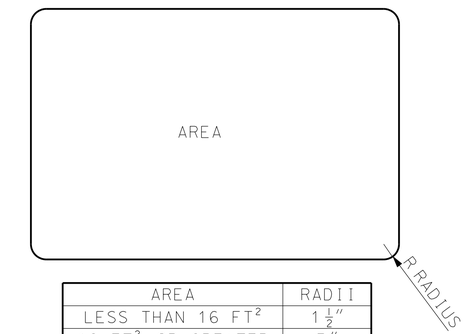

AREA	RADII
LESS THAN 16 FT^2	$1\frac{1}{2}''$
16 FT^2 OR GREATER	$3''$

RADII FOR SHEET SIGNS

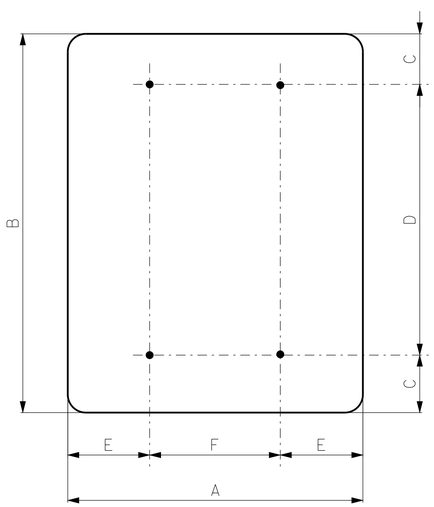

DIMENSIONS (IN.)					
A	B	C	D	E	F
36	48	6	36	6	24
36	54	6	42	6	24
48	60	6	48	9	30

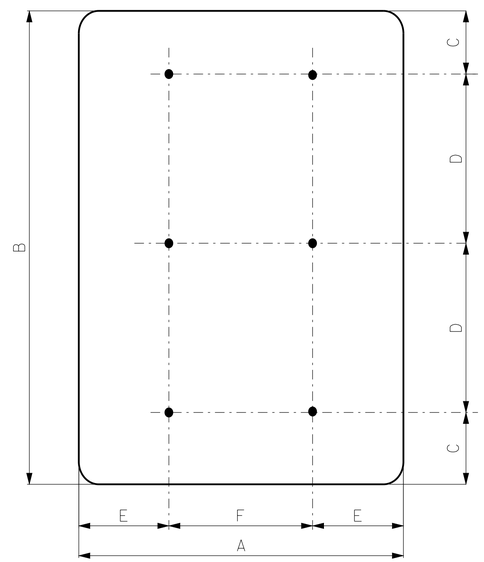

DIMENSIONS (IN.)					
A	B	C	D	E	F
48	96	6	42	9	30

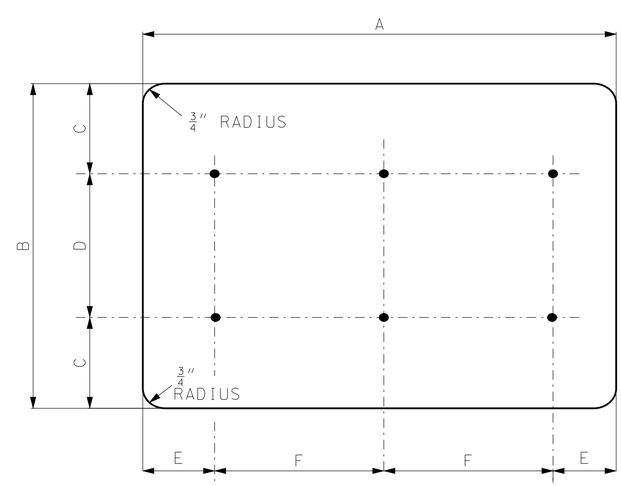

DIMENSIONS (IN.)					
A	B	C	D	E	F
96	48	6	36	16	32

GENERAL NOTES:

FLAT SHEET FOR SIGNS SHALL BE THE FOLLOWING THICKNESS:

9 SQUARE FEET OR LESS - .080 IN.,

OVER 9 SQUARE FEET BUT LESS THAN 16 SQUARE FEET - .100 IN.,

16 SQUARE FEET OR LARGER - .125 IN.

FOR MOUNTING DETAILS, SEE OTHER DRAWINGS.

HOLES IN SIGNS SHALL BE $\frac{3}{8}''$ AND PUNCHED AS SHOWN ON THIS DRAWING.

SIGNS WITH FOUR OR MORE HOLES REQUIRE BACKING BARS OR MULTIPLE POSTS.

MISSOURI HIGHWAYS AND TRANSPORTATION COMMISSION
105 WEST CAPITOL
JEFFERSON CITY, MO 65102
1-888-ASK-MODOT (1-888-275-6636)

STATE OF MISSOURI
EILEEN H. RACKERS
NUMBER PE-28336
PROFESSIONAL ENGINEER
THIS SHEET HAS BEEN SIGNED, SEALED AND DATED ELECTRONICALLY.

HIGHWAY SIGNING

HOLE PUNCHING

DATE EFFECTIVE: 02/01/2012
DATE PREPARED: 12/22/2011

903.02AL

IF A SEAL IS PRESENT ON THIS SHEET IT HAS BEEN ELECTRONICALLY SEALED AND DATED.