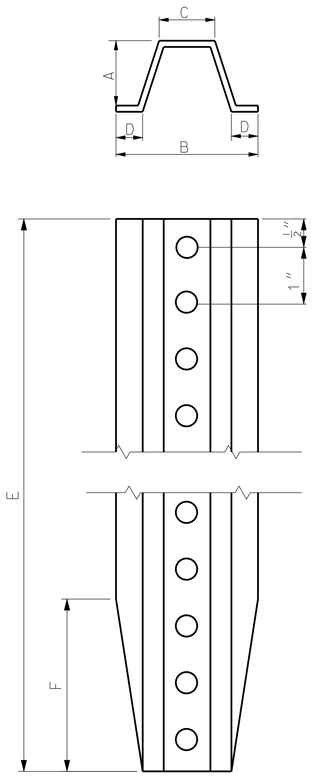


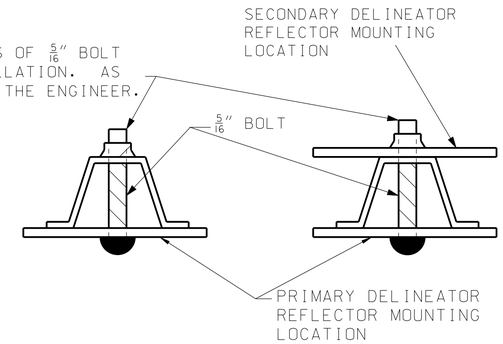


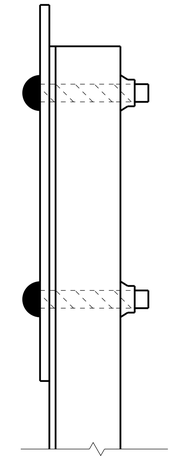

HOLE PUNCHING TO EQUAL 3/8" DIAMETER HOLES, ONE INCH CENTER TO CENTER, BEGINNING ONE-HALF INCH FROM THE END AND CONTINUING THE ENTIRE LENGTH OF THE POST.

| DELINEATOR POST | | | | | | | |
|---|---|---|---|---|---|---|---|
| LIMITS | LBS/FT (2) | DIMENSIONS - INCHES | | | | | |
| | | A | B | C | D | E | F |
| NOMINAL | 1.12 | 1 | 2 1/4 | 7/8 | 3/8 | 84 | 1 |
| TOLERANCE | ± 5% | ± 1/8 | ± 1/8 | ± 1/8 | ± 1/8 | ±1 | ± 1/4 |

(2) WEIGHT BEFORE GALVANIZING OR PUNCHING.

## DELINEATOR POST AND FASTENER DETAILS

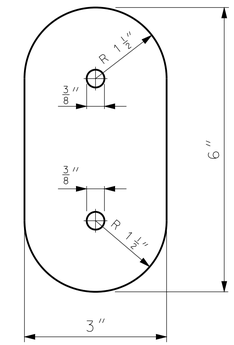


## CHANNEL POST DELINEATOR REFLECTOR

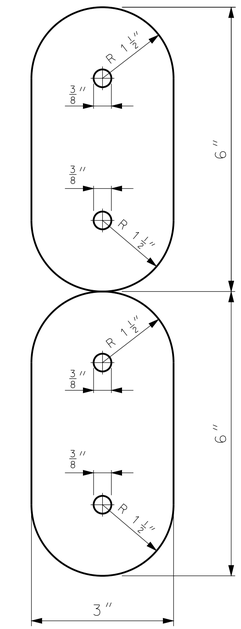


## DOUBLE STACKED CHANNEL POST DELINEATOR REFLECTOR

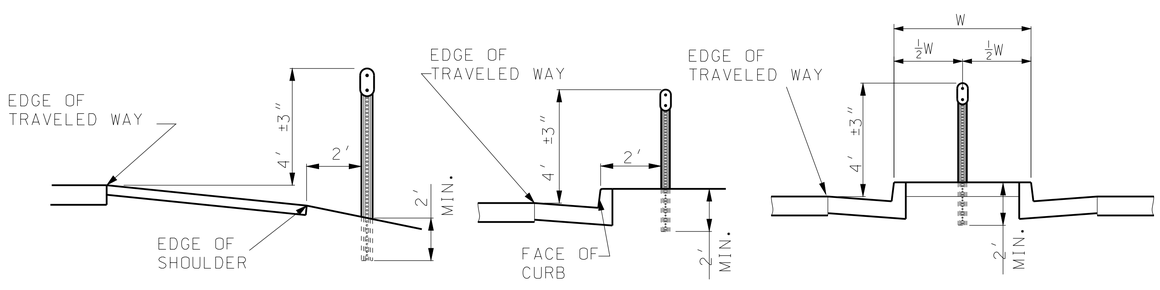


SHOULDER MOUNTED

OUTSIDE BARRIER CURB

NARROW PAVED MEDIAN

## DELINEATOR MOUNTING DETAILS

GENERAL NOTES:

RETROREFLECTIVE YELLOW, WHITE OR RED SHEETING IN ACCORDANCE WITH ASTM D 4956 TYPE 5 OR 8 SHALL BE APPLIED TO ONLY ONE SIDE OF THE CHANNEL POST DELINEATOR MOUNTED TOWARDS THE CHANNEL POST.

REFLECTIVE SHEETING SHALL FOLLOW GUIDELINES OUTLINED IN SEC 1042.2.7 FOR CORRECT APPLICATION OF SHEETING TO DELINEATOR BODY. THE COLOR OF THE SHEETING SHALL MATCH THE CLOSEST ADJACENT PAVEMENT MARKING. A DELINEATOR WITH RED SHEETING SHALL BE APPLIED TO THE BACK SIDE OF THE CHANNEL POST WHEN THE DELINEATION IS PLACED ALONG AN INTERCHANGE RAMP AND COULD BE VIEWED BY WRONG WAY TRAFFIC.


MISSOURI HIGHWAYS AND TRANSPORTATION COMMISSION
105 WEST CAPITOL
JEFFERSON CITY, MO 65102
1-888-ASK-MODOT (1-888-275-6636)


STATE OF MISSOURI
KATHRYN PHILLIPS HARVEY
NUMBER PE-23751
PROFESSIONAL ENGINEER
THIS SHEET HAS BEEN SIGNED, SEALED AND DATED ELECTRONICALLY.

# SIGN MOUNTING DETAILS

CHANNEL POST DELINEATORS

DATE EFFECTIVE: 02/01/2012
DATE PREPARED: 11/26/2012

903.03BH



IF A SEAL IS PRESENT ON THIS SHEET IT HAS BEEN ELECTRONICALLY SEALED AND DATED.