## WIDE FLANGE STRUCTURAL STEEL POSTS DESIGN DATA

| POST DES. NO. | NOM. SIZE (IN.) | WEIGHT LB/FT | WEIGHT LB/IN | DEPTH (IN.) | FLANGE WIDTH (IN.) | FLANGE THICK (IN.) | WEB THICK (IN.) |
|---|---|---|---|---|---|---|---|
| 1 | W6 | 9 | 0.75 | $5\frac{7}{8}$ | 4 | $\frac{3}{16}$ | $\frac{3}{16}$ |
| 2 | W6 | 15 | 1.25 | 6 | 6 | $\frac{1}{4}$ | $\frac{1}{4}$ |
| 3 | W8 | 18 | 1.50 | $8\frac{1}{8}$ | $5\frac{1}{4}$ | $\frac{5}{16}$ | $\frac{1}{4}$ |
| 4 | W10 | 22 | 1.83 | $10\frac{1}{8}$ | $5\frac{3}{4}$ | $\frac{3}{8}$ | $\frac{1}{4}$ |
| 5 | W10 | 26 | 2.17 | $10\frac{3}{8}$ | $5\frac{3}{4}$ | $\frac{7}{16}$ | $\frac{1}{4}$ |
| 6 | W12 | 35 | 2.92 | $12\frac{1}{2}$ | $6\frac{1}{2}$ | $\frac{1}{2}$ | $\frac{5}{16}$ |

THE WEIGHT OF STRUCTURAL STEEL POSTS SHOWN IN THE CONTRACT HAS BEEN COMPUTED USING THE WEIGHTS SHOWN.

## PERFORATED FUSE PLATE DATA TABLE

| POST DESIGN NO. | F (IN.) | G (IN.) | H (IN.) | J (IN.) | K (IN.) | L (IN.) | M (IN.) | N (IN.) | d1 (IN.) | d2 (IN.) | P (IN.) | BOLT DIA. (IN.) | WT. (EA.) (LBS.) |
|---|---|---|---|---|---|---|---|---|---|---|---|---|---|
| 1 | $4\frac{1}{4}$ | 1 | $1\frac{1}{8}$ | 4 | $2\frac{1}{4}$ | $\frac{7}{8}$ | 1 | $\frac{1}{2}$ | $\frac{9}{16}$ | $\frac{3}{4}$ | $\frac{3}{16}$ | $\frac{1}{2}$ | 0.76 |
| 2 | 5 | $1\frac{1}{4}$ | $1\frac{1}{4}$ | 6 | $3\frac{1}{2}$ | $1\frac{1}{4}$ | $1\frac{1}{2}$ | $\frac{3}{4}$ | $\frac{11}{16}$ | $1\frac{1}{4}$ | $\frac{1}{4}$ | $\frac{5}{8}$ | 1.67 |
| 3 | 5 | $1\frac{1}{4}$ | $1\frac{1}{4}$ | $5\frac{1}{4}$ | $2\frac{3}{4}$ | $1\frac{1}{4}$ | $1\frac{1}{4}$ | $\frac{3}{4}$ | $\frac{11}{16}$ | $1\frac{1}{16}$ | $\frac{1}{4}$ | $\frac{5}{8}$ | 1.51 |
| 4 | 6 | $1\frac{1}{2}$ | $1\frac{1}{2}$ | $5\frac{3}{4}$ | $2\frac{3}{4}$ | $1\frac{1}{2}$ | $1\frac{3}{8}$ | $\frac{13}{16}$ | $\frac{13}{16}$ | $1\frac{1}{8}$ | $\frac{5}{16}$ | $\frac{3}{4}$ | 2.52 |
| 5 | 6 | $1\frac{1}{2}$ | $1\frac{1}{2}$ | $5\frac{3}{4}$ | $2\frac{3}{4}$ | $1\frac{1}{2}$ | $1\frac{3}{8}$ | $\frac{13}{16}$ | $\frac{13}{16}$ | $1\frac{1}{8}$ | $\frac{5}{16}$ | $\frac{3}{4}$ | 2.52 |
| 6 | 6 | $1\frac{1}{2}$ | $1\frac{1}{2}$ | $6\frac{1}{2}$ | $3\frac{1}{2}$ | $1\frac{1}{2}$ | $1\frac{5}{8}$ | $\frac{13}{16}$ | $\frac{13}{16}$ | $1\frac{5}{16}$ | $\frac{3}{8}$ | $\frac{3}{4}$ | 3.35 |

## SPLICE PLATE DATA TABLE

| POST DESIGN NO. | J (IN.) | K (IN.) | L (IN.) | U (IN.) | d1 (IN.) | BOLT DIA. (IN.) | WT. (EA.) (LBS.) |
|---|---|---|---|---|---|---|---|
| 1 | 4 | $2\frac{1}{4}$ | $\frac{7}{8}$ | $\frac{3}{16}$ | $\frac{9}{16}$ | $\frac{1}{2}$ | 2.45 |
| 2 | 6 | $3\frac{1}{2}$ | $1\frac{1}{4}$ | $\frac{1}{4}$ | $\frac{11}{16}$ | $\frac{5}{8}$ | 4.89 |
| 3 | $5\frac{1}{4}$ | $2\frac{3}{4}$ | $1\frac{1}{4}$ | $\frac{5}{16}$ | $\frac{11}{16}$ | $\frac{5}{8}$ | 5.32 |
| 4 | $5\frac{3}{4}$ | $2\frac{3}{4}$ | $1\frac{1}{2}$ | $\frac{5}{16}$ | $\frac{13}{16}$ | $\frac{3}{4}$ | 5.75 |
| 5 | $5\frac{3}{4}$ | $2\frac{3}{4}$ | $1\frac{1}{2}$ | $\frac{7}{16}$ | $\frac{13}{16}$ | $\frac{3}{4}$ | 8.04 |
| 6 | $6\frac{1}{2}$ | $3\frac{1}{2}$ | $1\frac{1}{2}$ | $\frac{1}{2}$ | $\frac{13}{16}$ | $\frac{3}{4}$ | 10.47 |

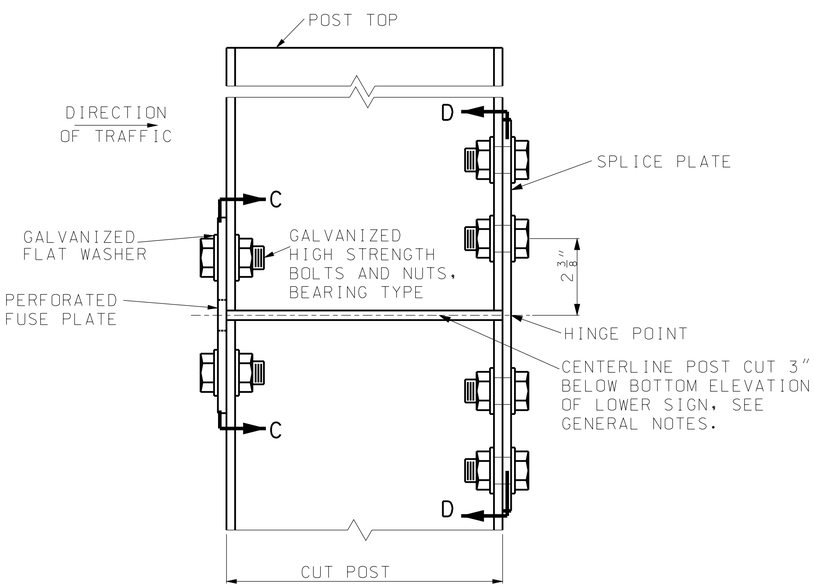


ELEVATION

**PERFORATED FUSE PLATE AND SPLICE PLATE DETAIL**

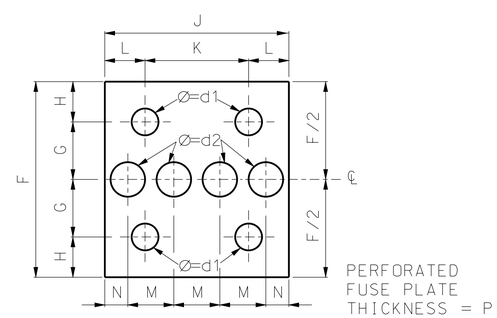


ELEVATION C-C

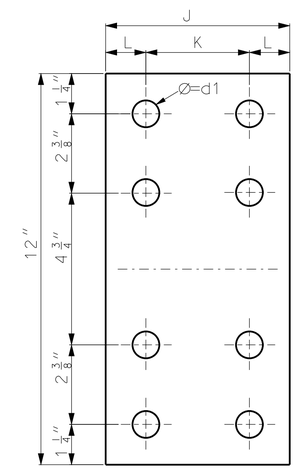


ELEVATION D-D

ALL HOLES SHALL BE DRILLED. ALL PLATE CUTS SHALL PREFERABLY BE SAW CUTS. HOWEVER: FLAME CUTTING WILL BE PERMITTED PROVIDED ALL EDGES ARE GROUND.

PERFORATED FUSE PLATE AND SPICE PLATE SHALL BE FABRICATED FROM ASTM A 36 STRUCTURAL STEEL.

GENERAL NOTE:

FOR ROADWAYS WHERE TRAFFIC MAY STRIKE THE BACKSIDE OF THE POST, PERFORATED FUSE PLATES SHALL BE INSTALLED ON BOTH SIDES OF THE POST.


MISSOURI HIGHWAYS AND TRANSPORTATION COMMISSION
105 WEST CAPITOL
JEFFERSON CITY, MO 65102
1-888-ASK-MODOT (1-888-275-6636)


STATE OF MISSOURI
KATHRYN PHILLIPS HARVEY
NUMBER PE-23751
PROFESSIONAL ENGINEER
THIS SHEET HAS BEEN SIGNED, SEALED AND DATED ELECTRONICALLY.

# SIGN MOUNTING DETAILS
## BREAKAWAY ASSEMBLIES FOR GROUND MOUNTED SIGNS

DATE EFFECTIVE: 02/01/2012
DATE PREPARED: 12/19/2011

903.03BH




IF A SEAL IS PRESENT ON THIS SHEET IT HAS BEEN ELECTRONICALLY SEALED AND DATED.