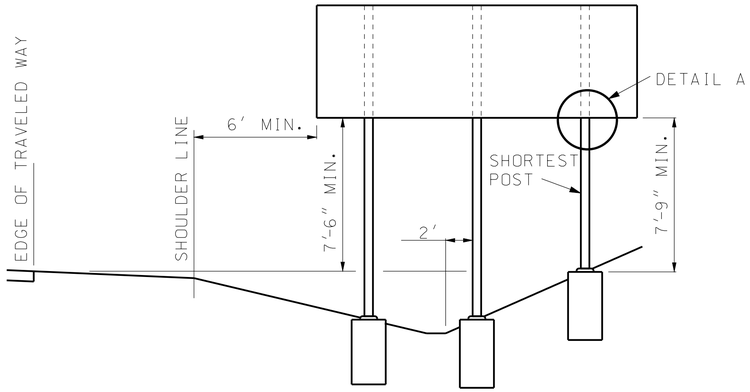


## DITCH SECTION

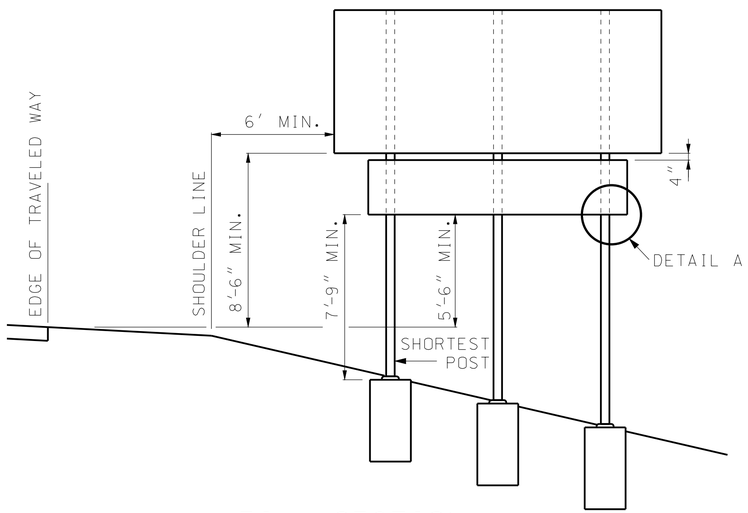


## FILL SECTION

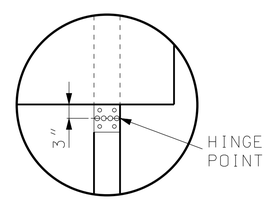


DETAIL A

NOTE: SEE SHEET 2 FOR FUSE PLATE DETAILS.

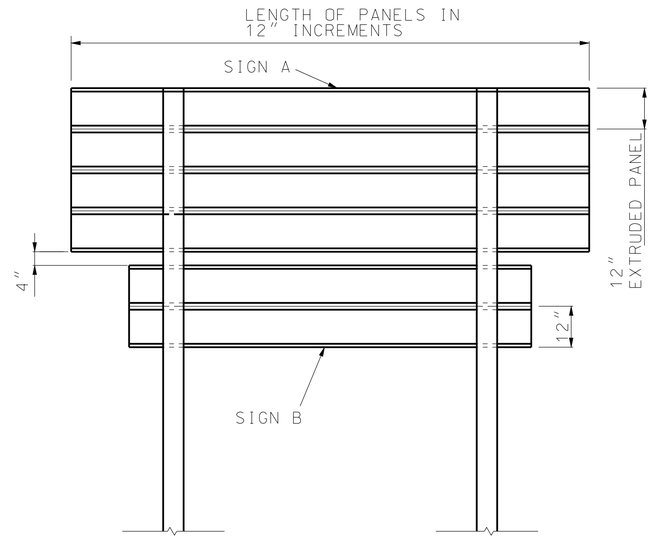


SIGN B MAY BE MOUNTED ABOVE OR BELOW SIGN A AS REQUIRED.

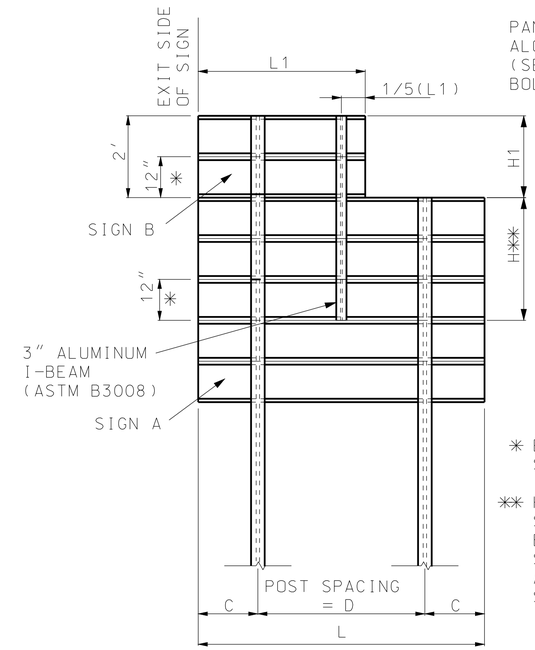


PANEL BOLTS SPACED 24″ O.C. ALONG SIGN/PANEL INTERFACE. (SEE OTHER DRAWING FOR BOLT & WASHER DETAILS.)

✱ EXTRUDED ALUMINUM PANEL. SEE OTHER DRAWINGS.

✱✱ H = H1 + 12″. H APPLIES TO SIGNS SUSPENDED ABOVE OR BELOW THE PRIMARY SIGN IF SECONDARY SIGN IS NOT ATTACHED TO THE MAIN SIGN POSTS.

USE THIS DETAIL FOR EXIT NUMBER PANELS MOUNTED ON GUIDE SIGNS.

## SIGN AND PANEL SPACING

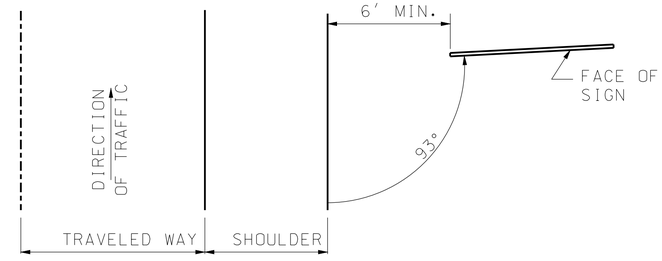


## LOCATION SKETCH

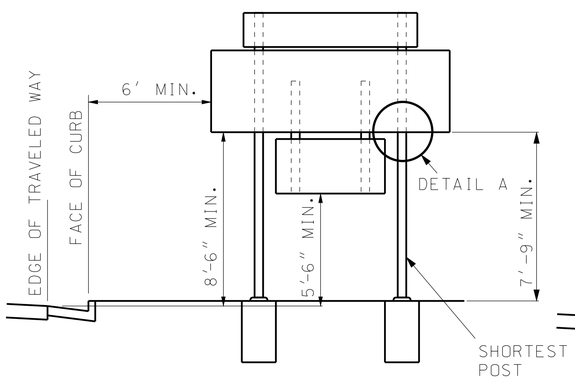


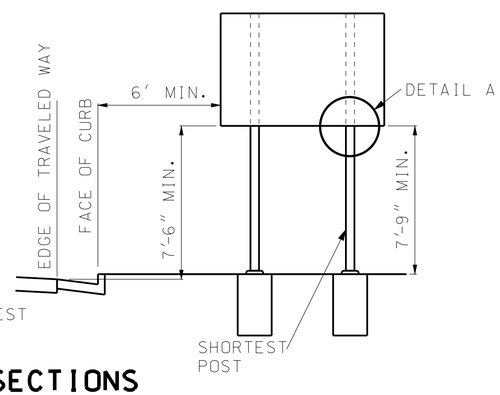


## BARRIER CURB SECTIONS

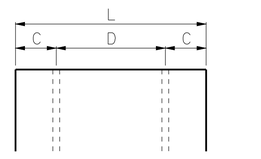


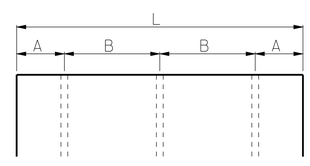


A = 1/6(L) C = 1/5(L)
B = 1/3(L) D = 3/5(L)

## POST SPACING

FOR L OF 6′ TO 17′ USE 2 POSTS.
FOR L GREATER THAN 17′ USE 3 POSTS.
FOR L LESS THAN 17′, 3 POSTS MAY BE USED DEPENDING ON SOIL CONDITIONS.
FOR POST DESIGNS 2, 4, 5 AND 6, LENGTH D OR B MUST BE 7 FEET.

GENERAL NOTE:

REFER TO THE GENERAL NOTES ON SHEET 1.


MISSOURI HIGHWAYS AND TRANSPORTATION COMMISSION
105 WEST CAPITOL
JEFFERSON CITY, MO 65102
1-888-ASK-MODOT (1-888-275-6636)


STATE OF MISSOURI
KATHRYN PHILLIPS HARVEY
NUMBER PE-23751
PROFESSIONAL ENGINEER
THIS SHEET HAS BEEN SIGNED, SEALED AND DATED ELECTRONICALLY.

# SIGN MOUNTING DETAILS

TYPICAL SECTION AND POST SPACING

DATE EFFECTIVE: 02/01/2012
DATE PREPARED: 12/19/2011

903.03BH



IF A SEAL IS PRESENT ON THIS SHEET IT HAS BEEN ELECTRONICALLY SEALED AND DATED.