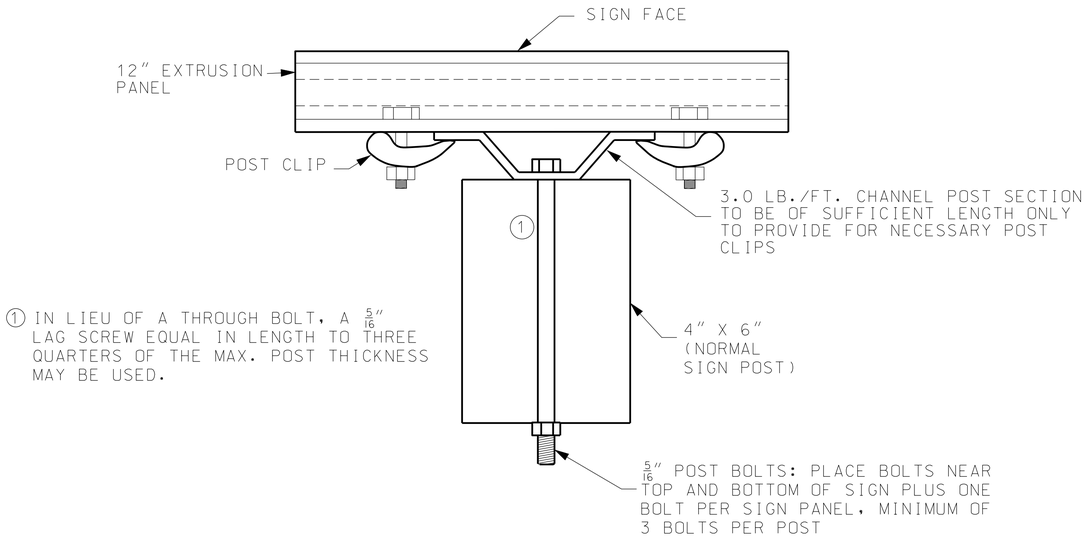


PLAN VIEW

## MOUNTING DETAILS FOR EXTRUDED PANELS ON WOOD 4" X 6" POST

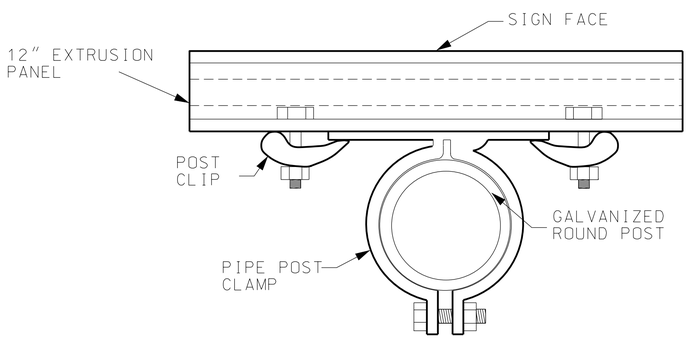


PLAN VIEW

## MOUNTING DETAILS FOR EXTRUDED PANELS ON ROUND PIPE POST

| NUMBER OF BOLTS TO ATTACH STEEL CHANNEL TO WOOD POST | |
|---|---|
| SIGN HEIGHT | NO. OF BOLTS* PER WOOD POST USED |
| 1' | 2 |
| 2' | 3 |
| 3' | 4 |
| 4' | 5 |
| 5' | 6 |
| 6' | 7 |
| 7' | 8 |
| *LAG SCREWS MAY BE SUBSTITUTED | |

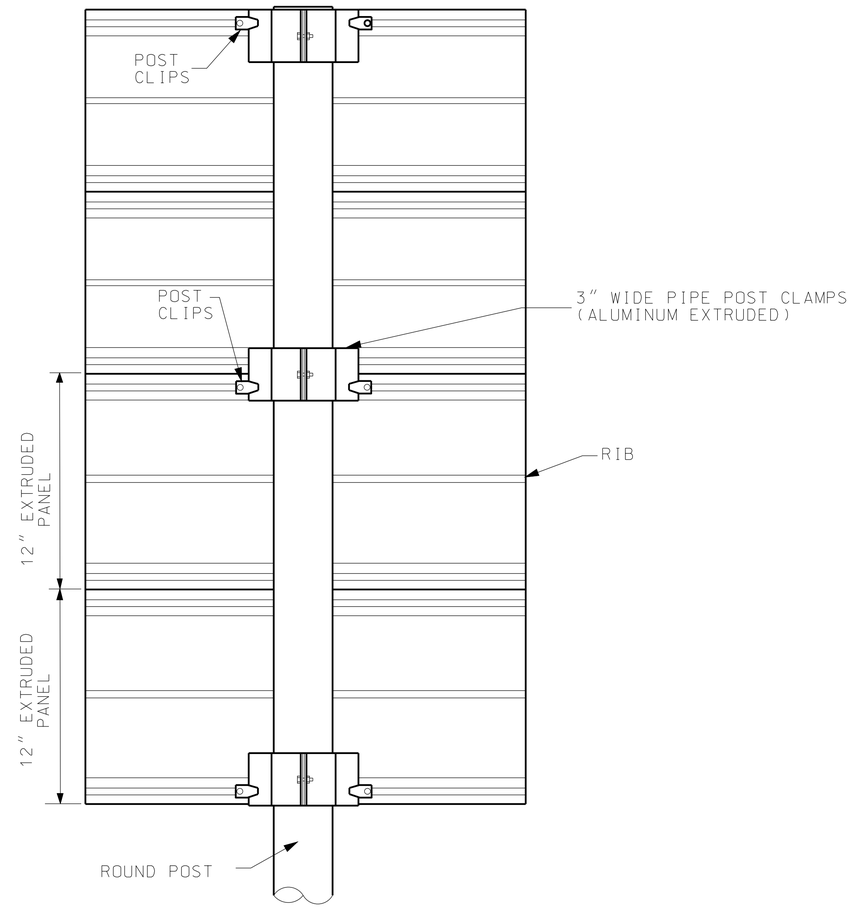


## TYPICAL POST CLIP MOUNTING DETAILS FOR ROUND PIPE POSTS

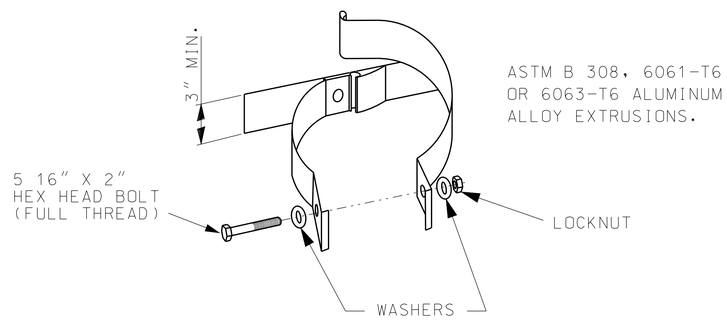


STAINLESS STEEL HARDWARE

## CLAMP TYPE SIGN SUPPORT FOR PIPE POST

GENERAL NOTES:

MISSOURI HIGHWAYS AND TRANSPORTATION COMMISSION
105 WEST CAPITOL
JEFFERSON CITY, MO 65102
1-888-ASK-MODOT (1-888-275-6636)

STATE OF MISSOURI
KATHRYN PHILLIPS HARVEY
NUMBER PE-23751
PROFESSIONAL ENGINEER

THIS SHEET HAS BEEN SIGNED, SEALED AND DATED ELECTRONICALLY.

# SIGN MOUNTING DETAILS

EXTRUDED PANEL ATTACHMENTS FOR SIGNS 30 SQ. FT. OR SMALLER

DATE EFFECTIVE: 02/01/2012
DATE PREPARED: 12/19/2011

903.03BH

SHEET NO. 11 OF 11

IF A SEAL IS PRESENT ON THIS SHEET IT HAS BEEN ELECTRONICALLY SEALED AND DATED.