## ROUND PIPE POST FOR GROUND MOUNTED SIGNS

| NOMINAL PIPE SIZE (IN.) | BOLT DATA | | | BASE CONNECTION DATA TABLE (IN.) | | | | | |
|---|---|---|---|---|---|---|---|---|---|
| | SIZE (IN.) | LENGTH (IN.) | TORQUE IN.-LB | A | B | C | R | T | W |
| $2\frac{1}{2}$ & 3 | $\frac{1}{2}$ | $3\frac{1}{2}$ | 140 | $6\frac{1}{4}$ | 9 | $\frac{1}{4}$ | $\frac{9}{32}$ | 1 | $\frac{1}{4}$ |
| 4 | $\frac{5}{8}$ | $3\frac{3}{4}$ | 345 | $7\frac{3}{16}$ | 10 | $\frac{1}{4}$ | $\frac{3}{8}$ | 1 | $\frac{5}{16}$ |

## ROUND PIPE POST AND FOOTING DATA TABLE

| NOM. SIZE (IN.) | WEIGHT | | STUB LENGTH | FOOTING | | CONCRETE |
|---|---|---|---|---|---|---|
| | LBS/FT | LBS/IN | | DIA. | DEPTH | C.Y. |
| $2\frac{1}{2}$ | 5.79 | 0.48 | $4'-3\frac{1}{2}''$ | 12" | 4'-6" | 0.13 |
| 3 | 7.58 | 0.63 | $4'-3\frac{1}{2}''$ | 12" | 4'-6" | 0.13 |
| 4 | 10.79 | 0.90 | $5'-3\frac{1}{2}''$ | 18" | 5'-6" | 0.36 |

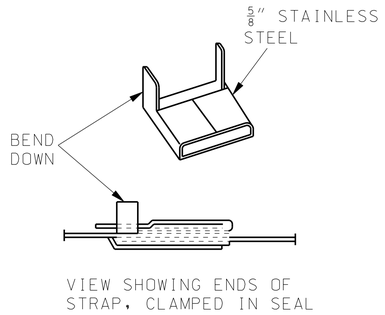


STRAP SEAL

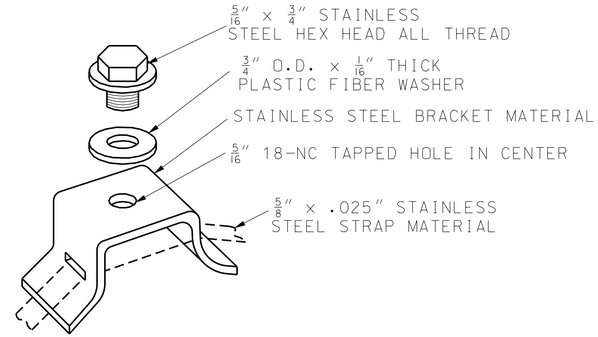


## FLARED LEG SIGN BRACKET

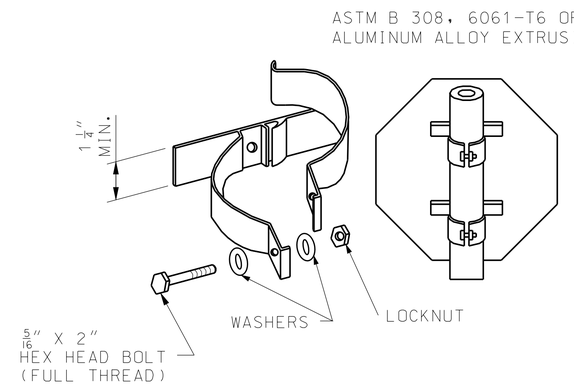


STAINLESS STEEL HARDWARE

## CLAMP TYPE SIGN SUPPORTS FOR PIPE POST

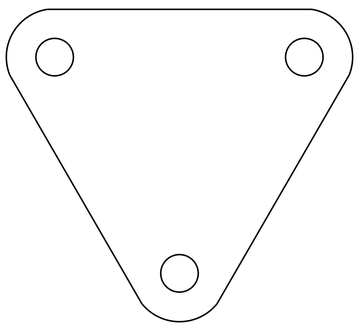

BOLT RETAINER

SHEET METAL BOLT RETAINER CUT FROM 30 GUAGE GALVANIZED SHEET METAL. PLACE BETWEEN BASE PLATES. SIZE VARIES TO FIT PLATE. BOLT HOLES SHALL BE $\frac{1}{16}$" LARGER THAN REQUIRED BOLT SIZE.

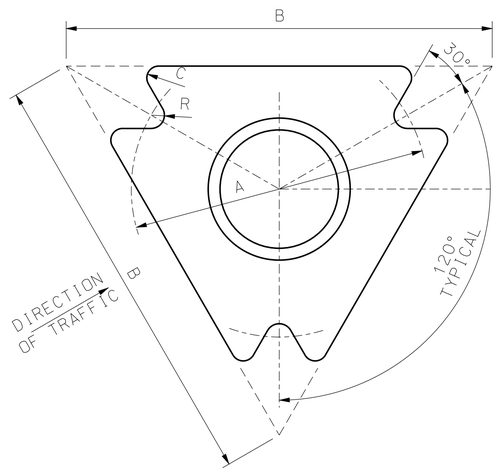


PLAN VIEW

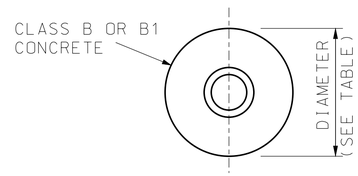


SECTION C-C

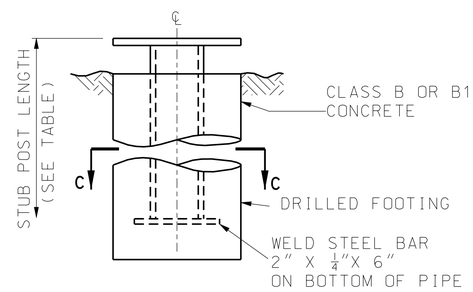


## FOUNDATION DETAIL
SLIP BASE ASSEMBLIES

ROLLED CRIMP TO ENGAGE PIPE O.D.

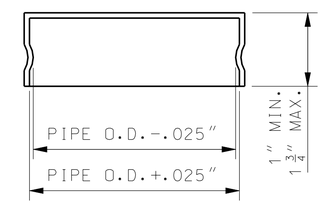


FRICTION CAP

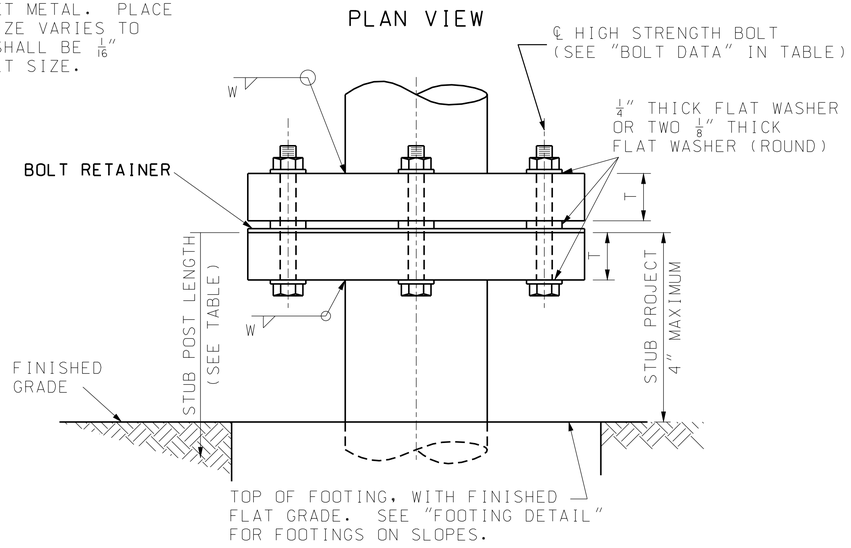


ELEVATION
(STEEL PIPE POST BASE CONNECTION)

## MULTI-DIRECTION SLIP BASE

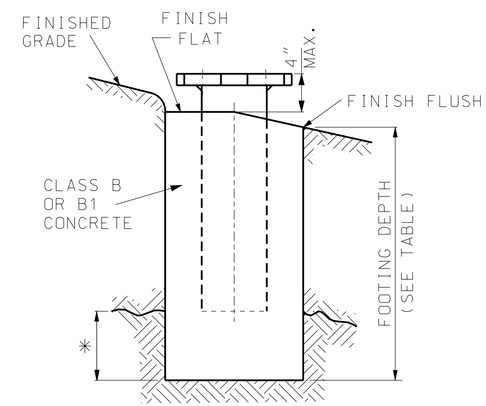


* PIPE 3" DIA. AND UNDER: 2' MAXIMUM IN ROCK, PIPE OVER 3" DIA.; 3' MAXIMUM IN ROCK

## FOOTING DETAIL

GENERAL NOTE:

REFER TO THE GENERAL NOTES ON SHEET 1.

IF A SEAL IS PRESENT ON THIS SHEET IT HAS BEEN ELECTRONICALLY SEALED AND DATED.


MISSOURI HIGHWAYS AND TRANSPORTATION COMMISSION
105 WEST CAPITOL
JEFFERSON CITY, MO 65102
1-888-ASK-MODOT (1-888-275-6636)


STATE OF MISSOURI
KATHRYN PHILLIPS HARVEY
NUMBER PE-23751
PROFESSIONAL ENGINEER
THIS SHEET HAS BEEN SIGNED, SEALED AND DATED ELECTRONICALLY.

# SIGN MOUNTING DETAILS
POST FOR SIGNS
30 SQUARE FEET
OR SMALLER

DATE EFFECTIVE: 02/01/2012
DATE PREPARED: 12/19/2011

903.03BH