## STRUCTUAL STEEL POST FOR GROUND MOUNTED SIGNS

| POST DES. NO.✳ | NOM SIZE (IN.)(LBS/FT) | TORQUE AND HIGH STRENGTH BOLTS | BASE CONNECTION DATA TABLE (IN.) A | B | C | D | E | F | G | W | R |
|---|---|---|---|---|---|---|---|---|---|---|---|
| 1 | W6x9 | $\frac{5}{8}$" ROUND × $2\frac{3}{4}$" 345 IN./LBS. | 5 | 2 | $1\frac{1}{4}$ | $2\frac{3}{4}$ | $1\frac{1}{8}$ | $\frac{3}{4}$ | $\frac{1}{2}$ | $\frac{1}{4}$ | $\frac{11}{32}$ |
| 2 | W6x15 | | | | | | | | | | |
| 3 | W8x18 | | | | | | | | | | |
| 4 | W10x22 | $\frac{3}{4}$" ROUND × $3\frac{1}{2}$" 555 IN./LBS. | 6 | $2\frac{1}{4}$ | $1\frac{3}{8}$ | $3\frac{1}{2}$ | $1\frac{1}{4}$ | 1 | $\frac{3}{4}$ | $\frac{5}{16}$ | $\frac{13}{32}$ |
| 5 | W10x26 | | | | | | | | | | |
| 6 | W12x35 | | | | | | | | | | |

## POST AND FOOTING DATA TABLE

| POST DES. NO. ✳ | POST: NOM. SIZE | WEIGHT LBS/FT | WEIGHT LBS/IN | STUB LENGTH | FOOTING: DIA. | LEVEL GROUND DEPTH | LEVEL GROUND C.Y. | 6:1 GRADE DEPTH | 6:1 GRADE C.Y. | 4:1 GRADE DEPTH | 4:1 GRADE C.Y. | 3:1 OR 2:1 GRADE DEPTH | 3:1 OR 2:1 GRADE C.Y. |
|---|---|---|---|---|---|---|---|---|---|---|---|---|---|
| 1 | W6 | 9.0 | 0.75 | 3'-0" | 15" | 3'-0" | 0.14 | 3'-2" | 0.15 | 3'-3" | 0.16 | 3'-6" | 0.17 |
| 2 | W6 | 15.0 | 1.25 | 4'-0" | 24" | 4'-0" | 0.47 | 4'-2" | 0.50 | 4'-3" | 0.51 | 4'-6" | 0.54 |
| 3 | W8 | 18.0 | 1.50 | 4'-6" | 28" | 4'-6" | 0.71 | 4'-8" | 0.73 | 4'-9" | 0.74 | 5'-0" | 0.78 |
| 4 | W10 | 22.0 | 1.83 | 5'-0" | 36" | 5'-0" | 1.31 | 5'-2" | 1.36 | 5'-3" | 1.39 | 5'-6" | 1.45 |
| 5 | W10 | 26.0 | 2.17 | 5'-0" | 36" | 5'-0" | 1.31 | 5'-3" | 1.37 | 5'-5" | 1.43 | 5'-9" | 1.52 |
| 6 | W12 | 35.0 | 2.92 | 5'-6" | 36" | 5'-6" | 1.44 | 5'-9" | 1.52 | 5'-11" | 1.56 | 6'-3" | 1.65 |

SHEET METAL BOLT RETAINER CUT FROM 30 GAGE GALVANIZED SHEET METAL. PLACE BETWEEN BASE PLATES. SIZE VARIES TO FIT PLATE. BOLT HOLES TO BE $\frac{1}{16}$" LARGER THAN REQUIRED BOLT SIZE.

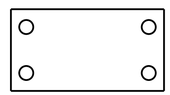

BOLT RETAINER

✳ FOR POST DESIGNS NUMBERS 3, 4, 5 AND 6 HAVING WEIGHTS GREATER THAN 18LBS./FT., POSTS SHALL BE SPACED AT LEAST 7' APART. FOR POST DESIGNS NUMBERS 1 AND 2, POSTS MAY BE SPACED LESS THAN 7' APART. DO NOT USE THREE NUMBER 1 OR 2 POSTS WITH A SIGN WIDTH OF LESS THAN 10'-6".

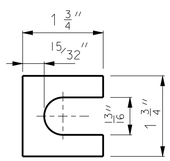


SHIM

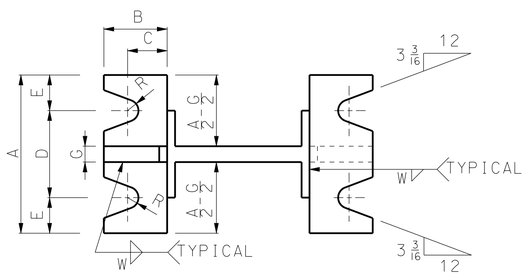


SECTION A-A

SECTION B-B
POST AND FOOTING

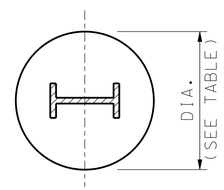


SECTION C-C

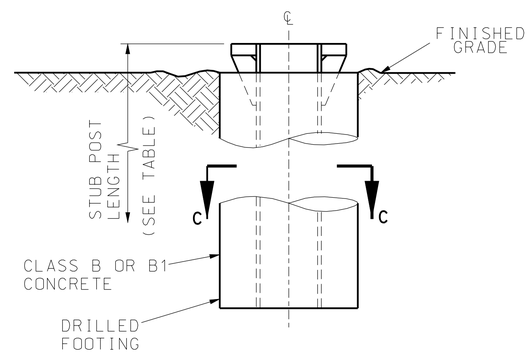


STUB DETAIL




STIFFENER PLATE

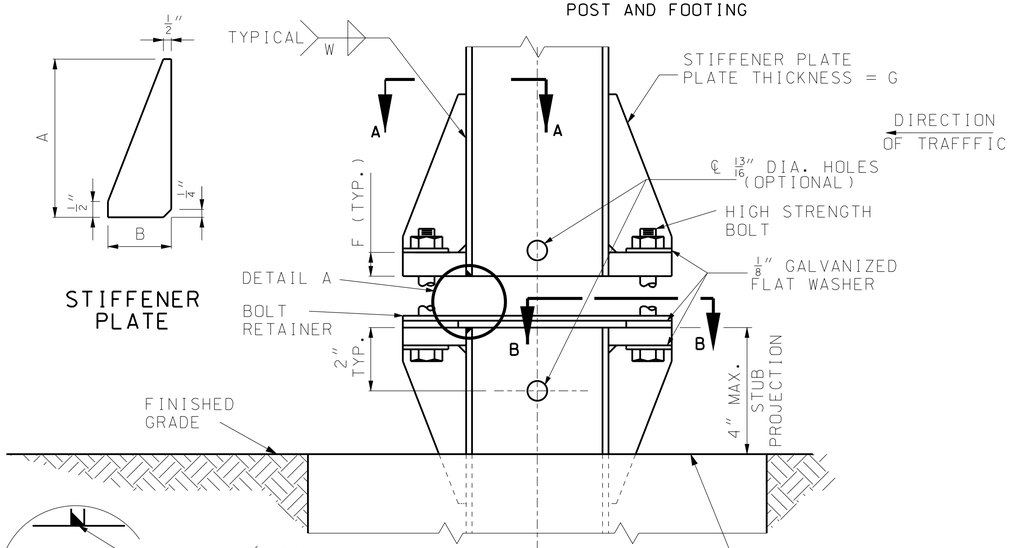


ELEVATION

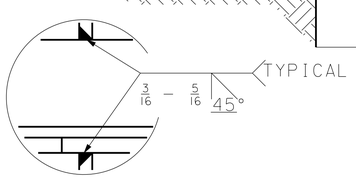


DETAIL A

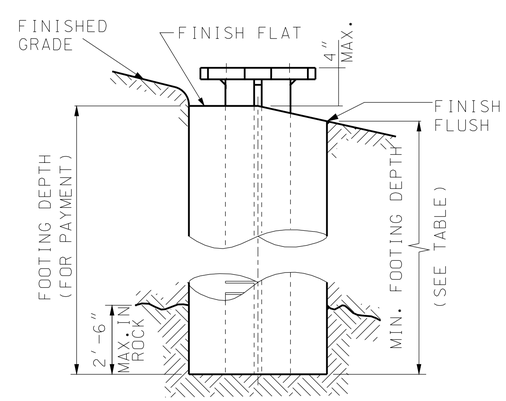


FOOTING DETAIL

GENERAL NOTES:

DESIGN SPECS: AASHTO STANDARD SPECIFICATIONS FOR STRUCTURAL SUPPORTS FOR HIGHWAY SIGNS. LUMINAIRES AND TRAFFIC SIGNALS - 1985 (EXCEPT 2001AND LATEST INTERIMS FOR STRUCTURAL STEEL POSTS).

POSTS, PERFORATED FUSE PLATE AND SPLICE PLATE TO BE GALVANIZED AFTER FABRICATION.

METAL PROJECTING BEYOND THE PLANE OF THE PLATE FACE WILL NOT BE ALLOWED.

REMOVE ALL GALVANIZING RUNS OR BEADS IN THE WASHER AREA.

ALL STRUCTURAL STEEL STIFFENER PLATES AND BASE PLATES, FOR GROUND MOUNTED SIGNS SHALL MEET THE REQUIREMENTS OF ASTM A 36 OR AASHTO M 270 GRADE 50, MINIMUM YIELD 50,000 PSI.

IN THE EVENT THE DISTANCE BETWEEN THE TOP OF THE FOOTING AND THE BOTTOM OF THE SIGN IS LESS THAN 7'-9", THE SIGN HEIGHT AND POST LENGTH IS TO BE INCREASED SUFFICIENTLY TO ACCOMMODATE THIS MINIMUM SPACING.

HINGE PLATES NOT REQUIRED ON SINGLE POST SIGNS OR ANY SIGNS USING PIPE POSTS.

NUTS ON HINGE PLATE BOLTS SHALL BE TIGHTENED TO THE REQUIRED MINIMUM BOLT TENSION VALUES SHOWN IN TABLE 1 SEC. 1080 OF THE STANDARD SPECIFICATIONS.

THE NUT SHALL BE FREE RUNNING. IF THE NUT WILL NOT SPIN ON THE BOLT BECAUSE OF GALVANIZING IRREGULARITIES, A LUBRICANT SHALL BE APPLIED.

ALL BREAKAWAY ASSEMBLY BOLTS SHALL BE TIGHTENED IN A SYSTEMATIC MANNER TO THE PRESCRIBED TORQUE SHOWN ON THIS DRAWING.

EACH BREAKAWAY ASSEMBLY BOLT SHALL BE LOOSENED AND RE-TIGHTENED TO THE REQUIRED TORQUE IN THE SAME ORDER AS THE INITIAL TIGHTENING.

THE THREADS SHALL BE BURRED AT THE NUT USING A CENTER PUNCH TO PREVENT NUT FROM LOOSENING.

POST LENGTH QUANTITY SHOWN ON PLANS INCLUDES STUB.

1" X $2\frac{1}{2}$" HIGH STRENGTH BOLTS FOR PIPE POSTS SHALL BE OF THE DESIGNATION AASHTO M 164 OR ASTM A 449. ALL OTHER H.S. BOLTS SHALL BE OF THE DESIGNATION AASHTO M 164.

FURNISH TWO .012"± AND TWO .0032"± THICK SHIMS PER POST FROM BRASS SHIM STOCK OR STRIP, DESIGNATION ASTM B 36. SHIM AS REQUIRED TO PLUMB POST.

HIGH STRENGTH BOLTS WITH HEX NUT AND THREE WASHERS WITH EACH BOLT ARE TO BE GALVANIZED.

OPTIONAL HOLES ($\frac{13}{16}$" ROUND FOR "I" SHAPE POSTS AND $\frac{9}{16}$" ROUND FOR PIPE POST BASE PLATES) AS SHOWN IN "ELEVATIONS" ARE TO BE USED AS AID FOR GALVANIZING ONLY.


MISSOURI HIGHWAYS AND TRANSPORTATION COMMISSION
105 WEST CAPITOL
JEFFERSON CITY, MO 65102
1-888-ASK-MODOT (1-888-275-6636)


STATE OF MISSOURI
KATHRYN PHILLIPS HARVEY
NUMBER PE-23751
PROFESSIONAL ENGINEER
THIS SHEET HAS BEEN SIGNED, SEALED AND DATED ELECTRONICALLY.

# SIGN MOUNTING DETAILS
## BREAKAWAY ASSEMBLIES FOR GROUND MOUNTED SIGNS

DATE EFFECTIVE: 02/01/2012
DATE PREPARED: 12/19/2011

903.03BH

SHEET NO. 1 OF 11


IF A SEAL IS PRESENT ON THIS SHEET IT HAS BEEN ELECTRONICALLY SEALED AND DATED.