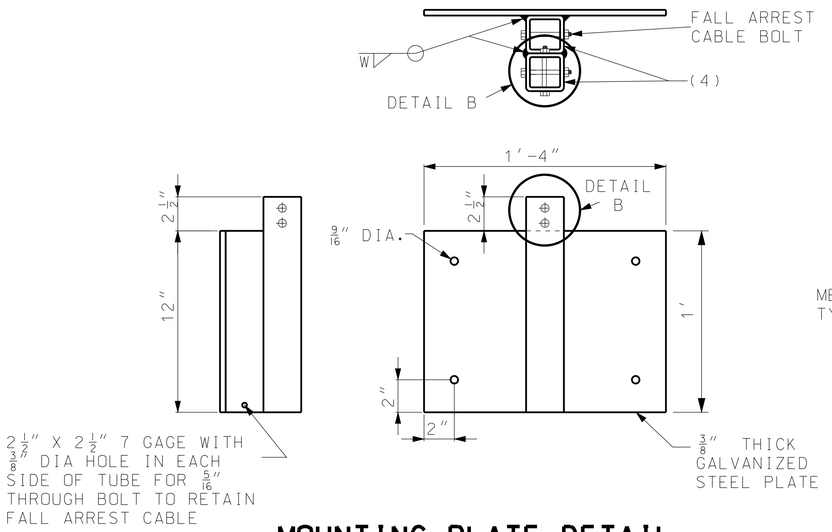


## MOUNTING PLATE DETAIL

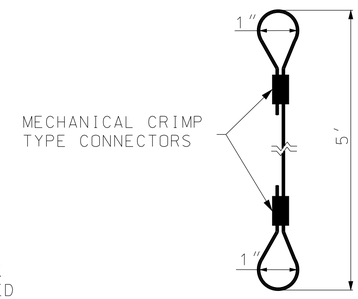


## FALL ARREST CABLE DETAIL

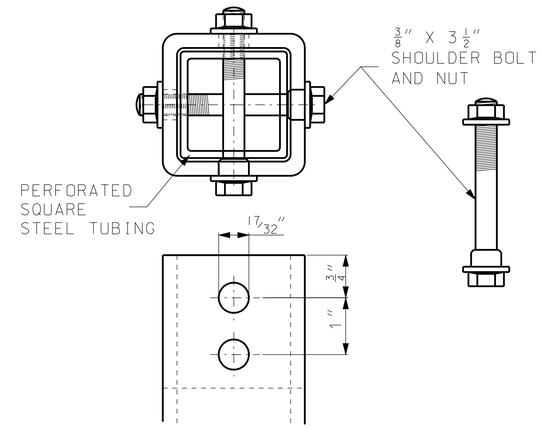


## DETAIL B SHOULDER BOLT

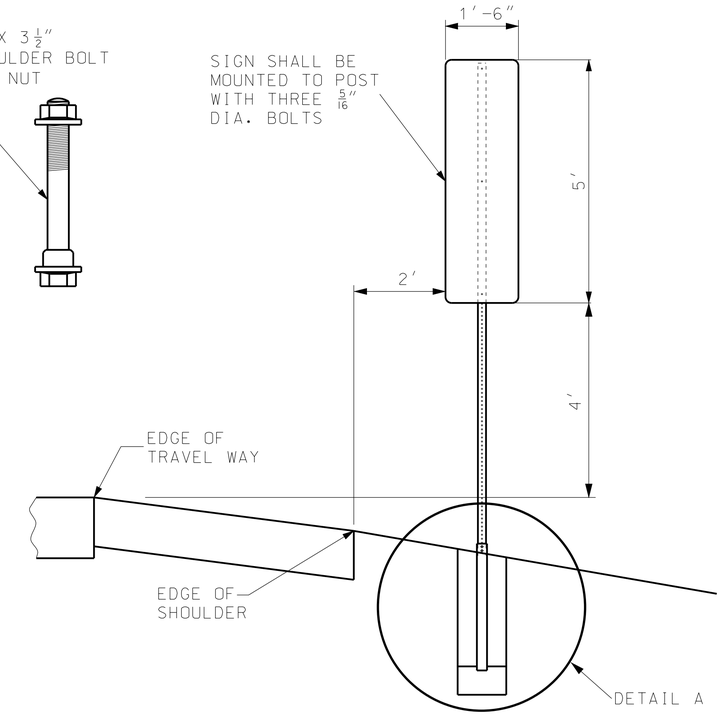


## GROUND INSTALLATION

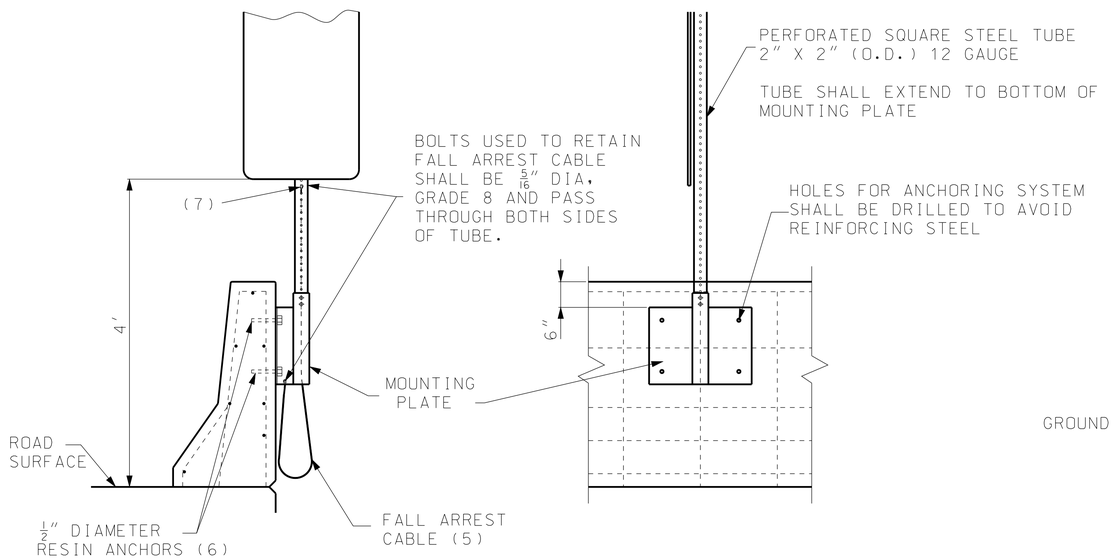


## BARRIER WALL INSTALLATION

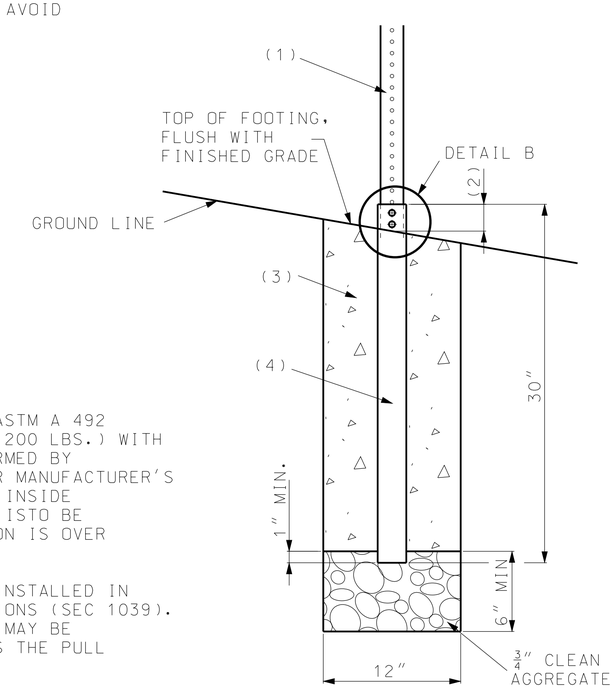


## DETAIL A

GENERAL NOTES:

PERFORATED SQUARE STEEL TUBE SHALL BE SECURED TO FOUNDATION TUBE OR BARRIER WALL MOUNTING PLATE WITH A SHOULDER BOLT PER PERFORATED SQUARE STEEL TUBE MANUFACTURER'S SPECIFICATION.

THE CONTRACT UNIT PRICE FOR REFERENCE MARKER SHALL INCLUDE SIGN PANEL, FASTENER, POST AND ALL MATERIAL CONTAINED IN THE FOUNDATION OR BARRIER WALL MOUNTING HARDWARE.

(1) PERFORATED SQUARE STEEL TUBE 2″ X 2″ (O.D.) 12 GAUGE. TUBE SHALL EXTEND A MINIMUM OF 24″ BELOW THE TOP OF THE FOUNDATION TUBE.

(2) TUBE TO EXTEND ABOVE FOUNDATION ONLY ENOUGH TO ALLOW BOLT TO BE INSERTED $2\frac{1}{2}$″ MAXIMUM.

(3) CONCRETE MIX TO HOLD FOUNDATION TUBE PLUMB WITHOUT BRACING SHALL HAVE A MINIMUM OF 5.5 SACKS OF CEMENT PER CUBIC YARD AND A MAXIMUM SLUMP OF $2\frac{1}{2}$″.

(4) $2\frac{1}{2}$″ × $2\frac{1}{2}$″ (O.D.) SQUARE TUBE GALVANIZED 7 GAGE WITH TWO 17/32″ DIAMETER HOLES IN EACH FACE $\frac{3}{4}$″ BELOW TOP OF TUBE.

(5) $\frac{1}{8}$″× 5′ LONG STAINLESS STEEL CABLE (ASTM A 492 TYPE 304 MINIMUIM BREAKING STRENGTH 200 LBS.) WITH A 1″ DIA. LOOP AT EACH END LOOPS FORMED BY MECHANICAL CRIMP TYPE CONNECTION PER MANUFACTURER'S SPECIFICATIONS. CABLE IS TO BE RUN INSIDE PERFORATED SQUARE STEEL TUBE. CABLE ISTO BE USED ONLY WHEN SIGN MOUNTING LOCATION IS OVER ANOTHER TRAVELWAY.

(6) $\frac{1}{2}$″ DIAMETER RESIN ANCHORS SHALL BE INSTALLED IN ACCORDANCE WITH STANDARD SPECIFICATIONS (SEC 1039). AN APPROVED MAECHANICAL TYPE ANCHOR MAY BE USED IF THE DEVICE EQUALS OR EXCEEDS THE PULL TEST REQUIREMENTS OF SEC. 1039.

(7) FALL ARREST CABLE TO BE SECURED TO NEXT FULL HOLE BELOW SIGN


MISSOURI HIGHWAYS AND TRANSPORTATION COMMISSION
105 WEST CAPITOL
JEFFERSON CITY, MO 65102
1-888-ASK-MODOT (1-888-275-6636)


STATE OF MISSOURI
KATHRYN PHILLIPS HARVEY
NUMBER PE-23751
PROFESSIONAL ENGINEER
THIS SHEET HAS BEEN SIGNED, SEALED AND DATED ELECTRONICALLY.

# SIGN MOUNTING DETAILS

EMERGENCY REFERENCE MARKERS

| DATE EFFECTIVE: 02/01/2012 | 903.03BH | SHEET NO. |
|---|---|---|
| DATE PREPARED: 12/19/2011 | | 10 OF 11 |


IF A SEAL IS PRESENT ON THIS SHEET IT HAS BEEN ELECTRONICALLY SEALED AND DATED.