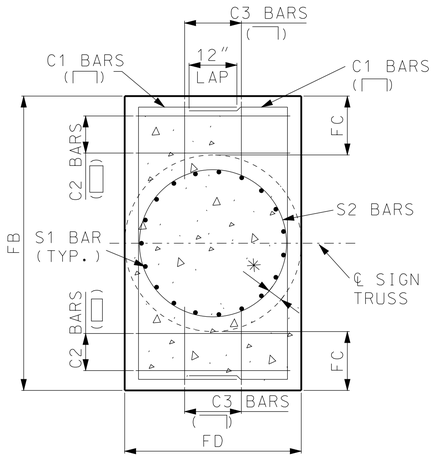

SECTION A-A

(TYPICAL SECTION SHOWING REINFORCING STEEL)

✳ 4" CLEAR FOR FD = 4'-6"
6" CLEAR FOR FD > 4'-6"

VERTICAL LEG OF C3 SHALL BE PLACED INSIDE SHAFT S2 BARS.

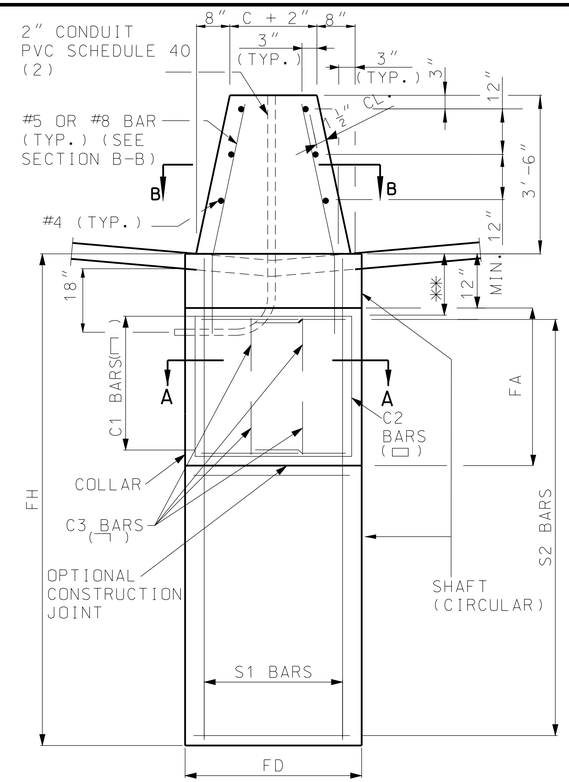

PART ELEVATION
(TYPE C CONCRETE TRAFFIC BARRIER)

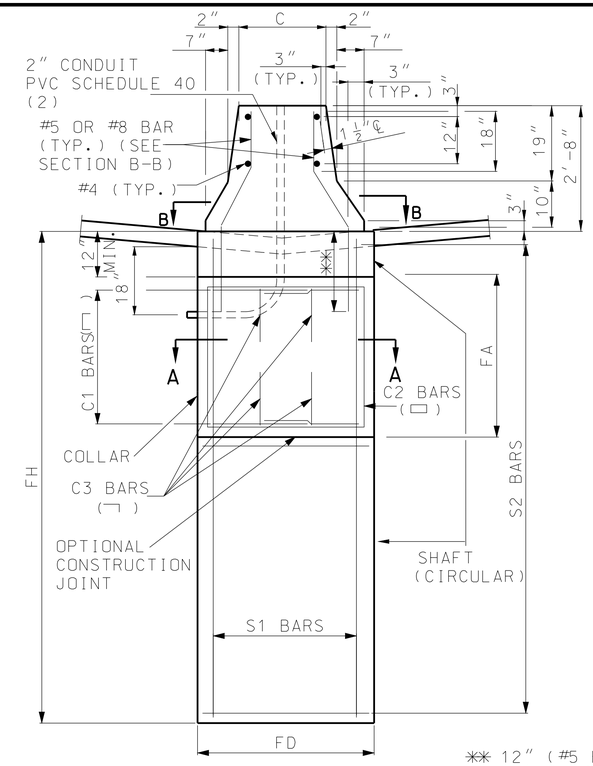

✳✳ 12" (#5 BAR)
2'-4" (#8 BAR)

PART ELEVATION
(TYPE A CONCRETE TRAFFIC BARRIER)

DETAILS OF ALTERNATE PEDESTAL

(TO BE USED ADJACENT TO TYPE A OR TYPE C MEDIAN BARRIER)

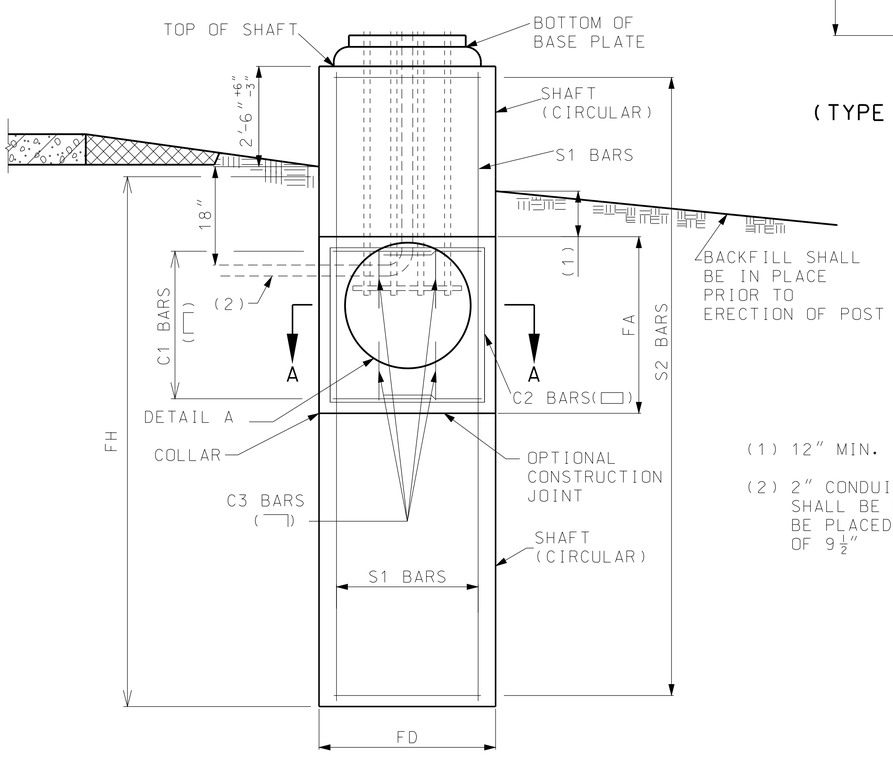

ELEVATION

(1) 12" MIN. TO 24" MAX.

(2) 2" CONDUIT IN THE CONCRETE PEDESTAL SHALL BE PVC SCHEDULE 40 AND SHALL BE PLACED WITH A MINIMUM BEND RADIUS OF $9\frac{1}{2}$"

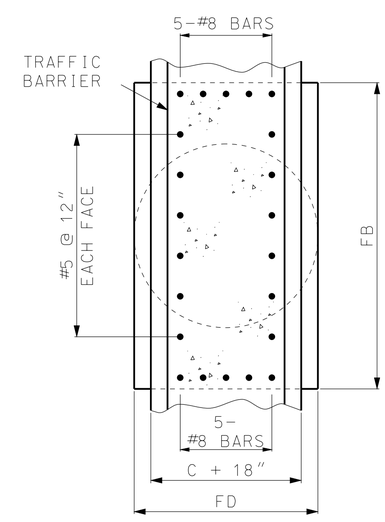

SECTION B-B

GENERAL NOTES:

SHAFT AND COLLAR SHALL BE CLASS B (P.C.C.).

MINIMUM CLEARANCE TO REINFORCEMENT IS 3" EXCEPT AS SHOWN.

WHEN ROCK IS ENCOUNTERED AT A DEPTH NOT EXCEEDING "FH"/2 FOR FD > 3'-0" OR "FH"/4 FOR FD ≤ 3'-0", THE DIMENSION "FH" MAY BE ADJUSTED TO A MINIMUM OF 3 X "FD", SUBJECT TO APPROVAL BY THE ENGINEER.

CONTACT THE ENGINEER IF WATER TABLE IS ENCOUNTERED DURING EXCAVATION.

PIPE COLUMN, BASE PLATE, ANCHOR BOLTS AND NOTES PERTAINING TO THESE ITEMS HAVE BEEN OMITTED FOR CLARITY. REFER TO SHEET 3 OF 7 FOR DETAILS OF THESE ITEMS.

MISSOURI HIGHWAYS AND TRANSPORTATION COMMISSION
105 WEST CAPITOL
JEFFERSON CITY, MO 65102
1-888-ASK-MODOT (1-888-275-6636)

STATE OF MISSOURI
KATHRYN PHILLIPS HARVEY
NUMBER PE-23751
PROFESSIONAL ENGINEER
THIS SHEET HAS BEEN SIGNED, SEALED AND DATED ELECTRONICALLY.

OVERHEAD SIGN TRUSSES
DRILLED SHAFT OPTION

DATE EFFECTIVE: 12-01-2008
DATE PREPARED: 7/19/2012

903.12Y

SHEET NO. 5 OF 7

IF A SEAL IS PRESENT ON THIS SHEET IT HAS BEEN ELECTRONICALLY SEALED AND DATED.