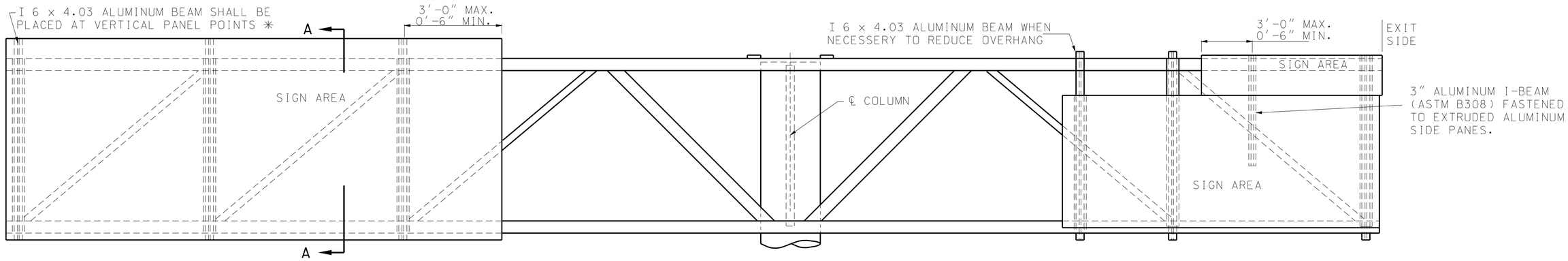

TYPICAL ELEVATION OF SIGNS COMPONENTS

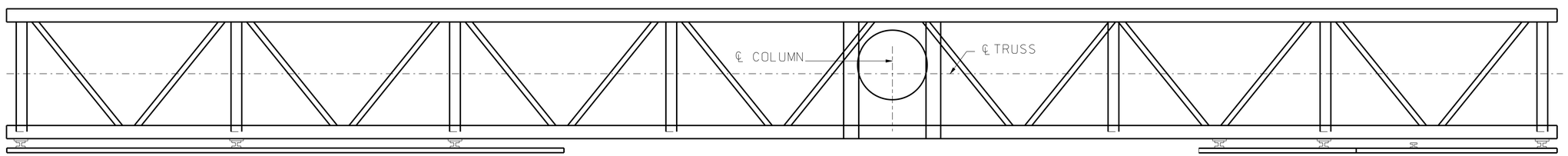

TYPICAL PLAN OF SIGN COMPONENTS

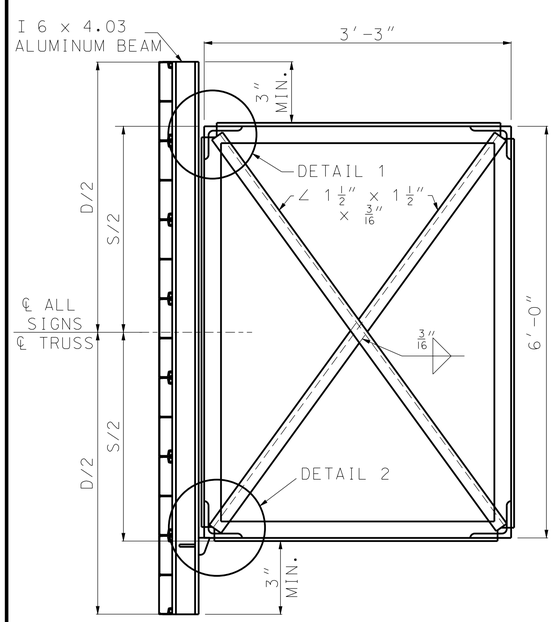

SECTION A-A
TYPICAL SECTION
OF SIGN SUPPORT

NOTE:
"D" = GREATEST OVERALL DEPTH
OF ANY SIGNS ON TRUSSES.

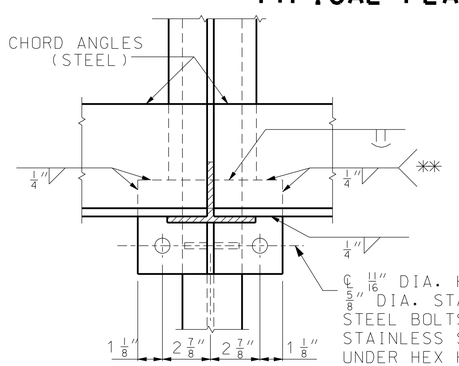

9/16" DIA. HOLES IN ALUMINUM FLANGE.
9/16" x 1" SLOT IN 5/8" ℄ FOR 1/2" DIA. STAINLESS STEEL HEX HEAD BOLTS AND LOCK-NUTS WITH FLAT STAINLESS STEEL WASHERS.

SECTION C-C

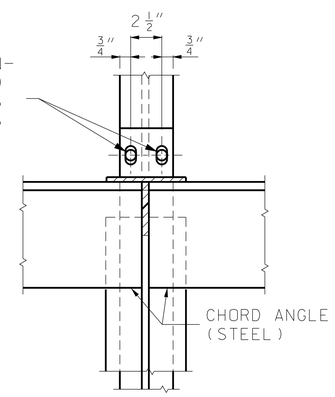

SECTION F-F

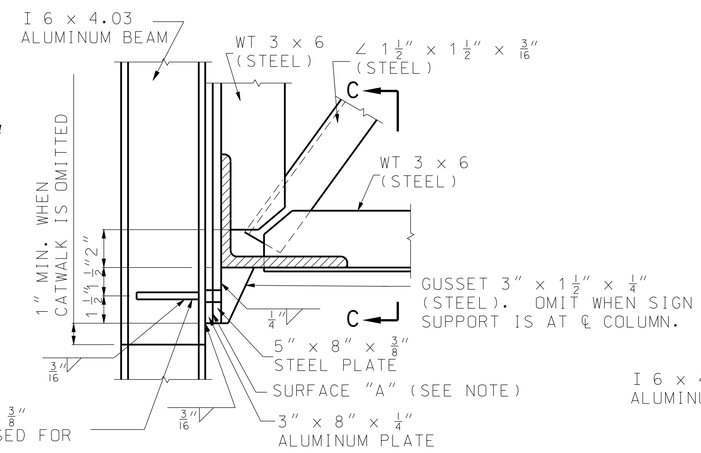

DETAIL 2

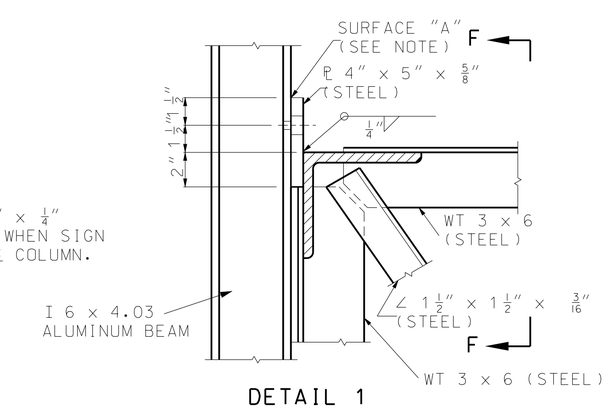

DETAIL 1

NOTE:
SURFACE "A", ZINC CHROMATE ON ALUMINUM SURFACES. NORMAL CLEANING AND PAINTING ON STEEL SURFACES. ZINC CHROMATE IS NOT REQUIRED WHEN STEEL IS GALVANIZED.

✳ FOR SIGN HEIGHTS GREATER THAN 17'-0", BUT LESS THAN OR EQUAL TO 20'-0" USE ADDITIONAL I 6 x 4.03 ALUMINUM BEAMS TO ACHIEVE A MAXIMUM SPACING OF 4'-0" BETWEEN SIGN SUPPORTS.

✳✳ WHEN SIGN SUPPORTS ARE PLACED BETWEEN VERTICAL PANEL POINTS AS ILLUSTRATED IN TYPICAL ELEVATION OF SIGNS COMPONENTS, WELD THE 3/8" STEEL PLATE TO THE BOTTOM CHORD WITH A 1/4" FILLET WELD.

GENERAL NOTES:

EXIT NO. PANELS SHALL BE MONTED FLUSH WITH THE EXIT SIDE OF THE GUIDE SIGN.

ALL SIGNS SHALL BE CENTERED VERTICALLY ABOUT THE HORIZONTAL ℄ OF THE TRUSS.

SEE STANDARD PLAN 903.03 FOR SIGN MOUNTING DETAILS.

MISSOURI HIGHWAYS AND TRANSPORTATION COMMISSION
105 WEST CAPITOL
JEFFERSON CITY, MO 65102
1-888-ASK-MODOT (1-888-275-6636)

STATE OF MISSOURI
KATHRYN PHILLIPS HARVEY
NUMBER PE-23751
PROFESSIONAL ENGINEER
THIS SHEET HAS BEEN SIGNED, SEALED AND DATED ELECTRONICALLY.

OVERHEAD SIGN TRUSSES
STRUCTURAL STEEL BUTTERFLY AND CANTILEVER

DATE EFFECTIVE: 12-01-2008	903.12Y	SHEET NO. 7 OF 7
DATE PREPARED: 7/19/2012		

IF A SEAL IS PRESENT ON THIS SHEET IT HAS BEEN ELECTRONICALLY SEALED AND DATED.