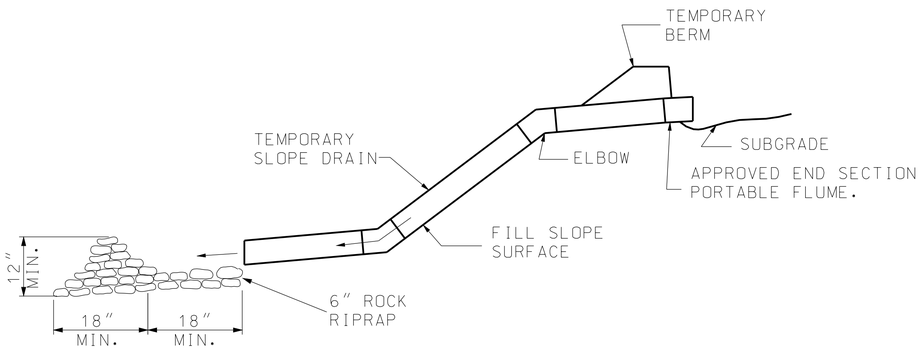

NOTE:

IN SOME CASES IT MAY BE NECESSARY TO EMBED METAL OR PALSTIC PIPE INTO THE FILL SLOPE TO SECURE PROPER ANCHORAGE.

SECTION A-A

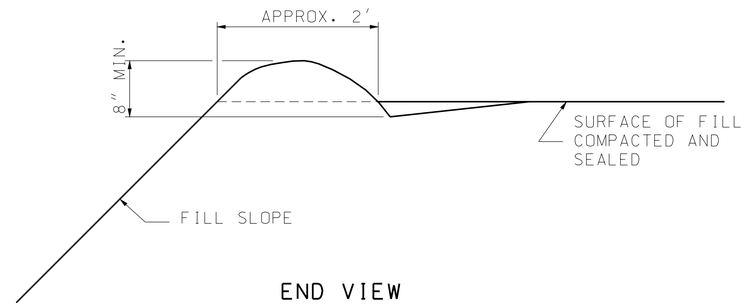

END VIEW

TYPE 'A' TEMPORARY BERM

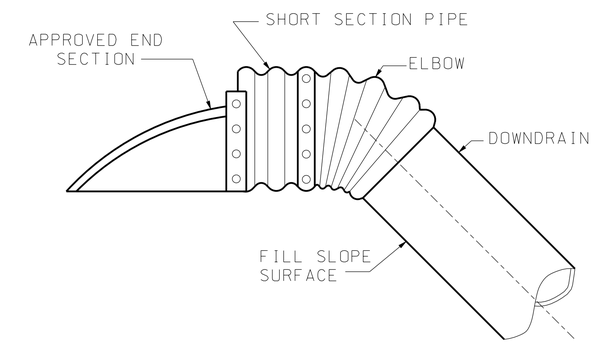

INLET TREATMENT

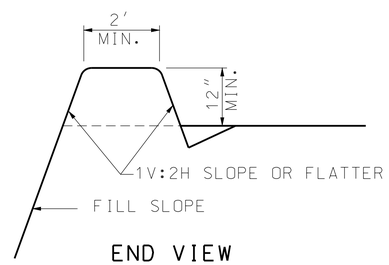

END VIEW
FILL BERM

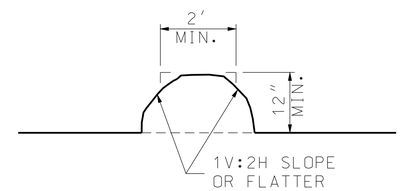

END VIEW
TRANSVERSE BERM

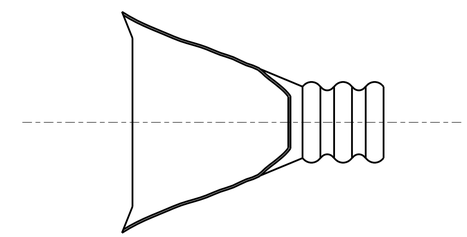

PLAN VIEW END SECTION

TEMPORARY SLOPE DRAIN

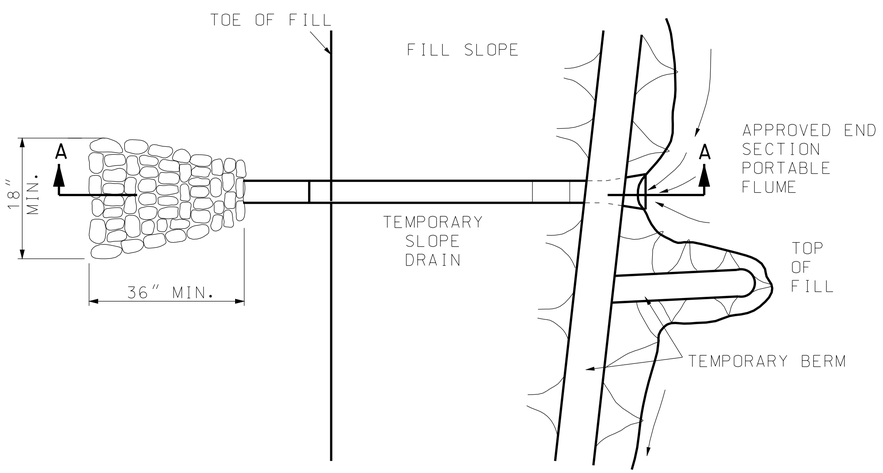

PLAN VIEW

TEMPORARY SLOPE DRAIN

(METAL, FLEXIBLE RUBBER OR PLASTIC PIPE)

NOTE:
MAXIMUM LENGTH BETWEEN SLOPE DRAINS SHALL BE APPROXIMATELY 500 FEET.

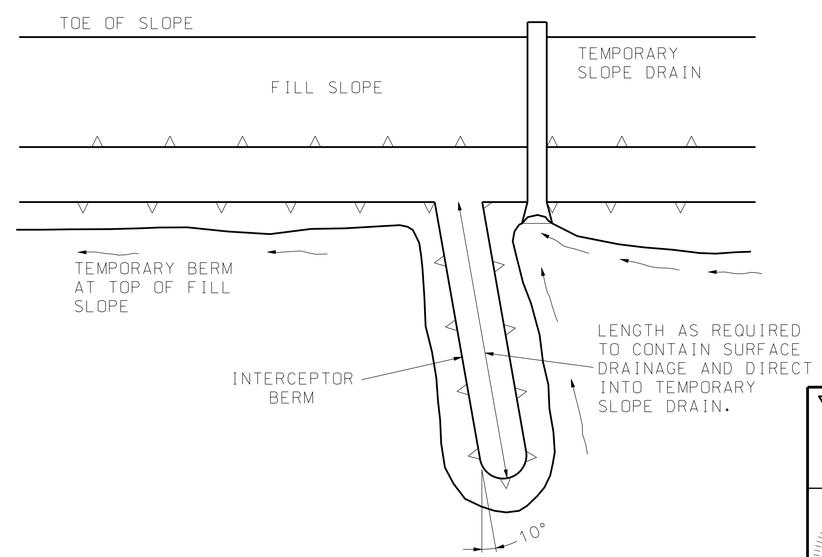

PLAN VIEW

TYPE 'B' TEMPORARY BERM

MISSOURI HIGHWAYS AND TRANSPORTATION COMMISSION
105 WEST CAPITOL
JEFFERSON CITY, MO 65102
1-888-ASK-MODOT (1-888-275-6636)

STATE OF MISSOURI
KATHRYN PHILLIPS HARVEY
NUMBER PE-23751
PROFESSIONAL ENGINEER
THIS SHEET HAS BEEN SIGNED, SEALED AND DATED ELECTRONICALLY.

TEMPORARY EROSION CONTROL MEASURES

TEMPORARY BERMS AND SLOPE DRAINS

DATE EFFECTIVE:	04/01/2009	806.10H	SHEET NO. 5 OF 7
DATE PREPARED:	8/26/2009		

IF A SEAL IS PRESENT ON THIS SHEET IT HAS BEEN ELECTRONICALLY SEALED AND DATED.