BEFORE YOU
DIG – DRILL – BLAST
Call 1-800-344-7483
(TOLL FREE)
MISSOURI ONE CALL SYSTEM, INC.

# WAYLAND MoDOT MAINTENANCE FACILITY SEWER EXTENSION

## WAYLAND, CLARK COUNTY, MISSOURI

STATE OF MISSOURI
STEVEN R. SCHULTZ
NUMBER
PE-2001004664
PROFESSIONAL ENGINEER

STEVEN R. SCHULTZ
PE-2001004664

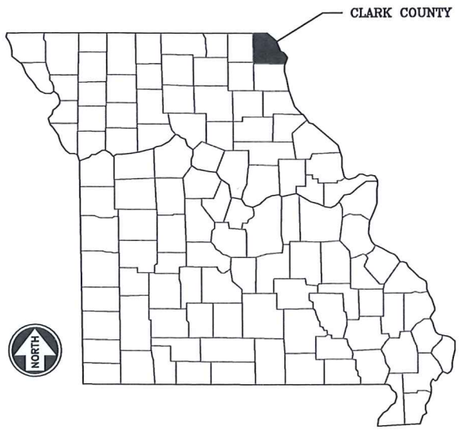


**KEY MAP**

SHOWING LOCATION OF COUNTY

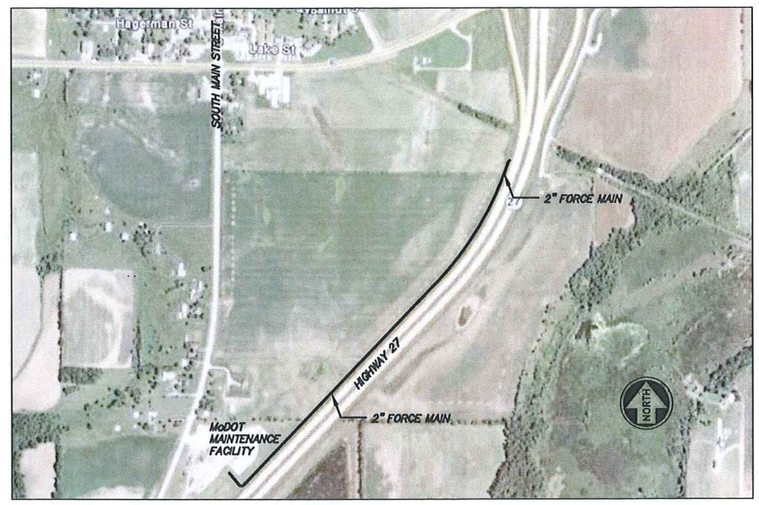


**PROJECT LOCATION MAP**

NOT TO SCALE

## INDEX OF SHEETS


| SHEET NUMBER | SHEET TITLE |
|---|---|
| 1 | COVER |
| 2 | LIFT STATION SITE PLAN |
| 3 | PLAN & PROFILE – STA. 0+00 TO STA. 13+50 |
| 4 | PLAN & PROFILE – STA. 13+50 TO STA. 27+50 |
| 5 | PLAN & PROFILE – STA. 27+50 TO STA. 39+03.47 |
| 6 | PUMP STATION DETAILS |
| 7 | ELECTRICAL DETAILS |
| 8 | MISC DETAILS |
| 9 | MISC DETAILS |
| 10 | EROSION CONTROL DETAILS AND OIL WATER SEPERATOR DETAILS |


NOTES TO CONTRACTOR:

1) UNDERGROUND UTILITIES HAVE BEEN SHOWN FROM APPROXIMATE LOCATIONS PROVIDED BY UTILITY COMPANIES, THEREFORE THEIR LOCATIONS MUST BE CONSIDERED APPROXIMATE ONLY. VERIFICATION OF THE LOCATIONS OF UNDERGROUND UTILITIES, SHOWN OR NOT SHOWN, WILL BE THE RESPONSIBILITY OF THE CONSTRUCTION CONTRACTOR.

2) CONTRACTOR SHALL MAKE EVERY EFFORT TO ASSURE MINIMUM CLEARANCE BETWEEN SEWER LINES AND WATER LINES (10' HORIZONTAL, 18" VERTICAL AT CROSSINGS).

3) ALL ROADS, DRIVEWAYS, CULVERTS, SIDEWALKS, FENCES, AND LANDSCAPING DAMAGED DURING CONSTRUCTION SHALL BE REPAIRED OR REPLACED.

4) ALL CONSTRUCTION SHALL BE IN ACCORDANCE WITH THE CITY OF WAYLAND STANDARD SPECIFICATIONS FOR GRAVITY SANITARY SEWER CONSTRUCTION

5) ALL EXCAVATION WITHIN THE STREET RIGHT-OF-WAY SHALL BE BACKFILLED WITH GRANULAR MATERIAL OR COMPACTED EARTH FILL.

6) ALL SEWER GREATER THAN 15 FEET IN DEPTH SHALL BE A MINIMUM OF SDR 26. ALL MANHOLES GREATER THAN 16 FEET IN DEPTH SHALL HAVE A DOUBLE STEEL REINFORCEMENT PER CITY OF WAYLAND SPECIFICATIONS.

7) ALL EROSION CONTROL DEVICES SHALL BE INSTALLED IN CONFORMITY WITH THE CITY OF WAYLAND MISSOURI STANDARDS OR STATE OF MISSOURI MINUMUM STANDARDS.

8) IT IS THE INTENT OF THESE PLANS TO COMPLY WITH THE REQUIREMENTS OF THE MISSOURI CLEAN WATER COMMISSION.

9) SILT FENCE SHALL BE PLACED AS INDICATED ON THE PLANS

**H&V CONTROL POINTS**

| PT # | SHEET# | NORTHING | EASTING | ELEVATION |
|---|---|---|---|---|
| 1 | NOT SHOWN | 1661897.31 | 521089.67 | 531.45 |
| 2 | 5 | 1660795.85 | 521040.65 | 533.69 |
| 3 | 4 | 1659394.11 | 519886.07 | 532.50 |
| 4 | 3 | 1658827.79 | 519330.49 | 531.25 |

*NOTE: CONTRACTOR IS TO VERIFY H&V CONTROL POINTS PRIOR TO USE TO VERIFY THAT THEY HAVE NOT BEEN DISTURBED.*

**UTILITIES**

SEWER – CITY OF WAYLAND
CONTACT: GEORGE HAUSDOF
660-216-5100
CITY HALL 660-754-6132

ELECTRIC – AMERENUE
(CALL ONE-CALL)

WATER – CONSOLIDATED PWS#1
P.O. BOX 307
WILLIAMSTOWN, MO 63473
573-853-4343

GAS – ATMOS ENERGY
(CALL ONE-CALL)

TELEPHONE – CENTURY LINK
(CALL ONE-CALL)

**BENCHMARK**

*TBM 1= SET STEPPED 60d NAILS IN NORTH SIDE OF POWER POLE AT WEST SIDE HIGHWAY 27, 50±. SOUTH EAST OF LIFT STATION. ELEVATION=532.18 NOT SHOWN*

*TBM 2= SET STEPPED 60d NAILS IN EAST SIDE OF CORNER FENCE POST AT NORTH EAST CORNER OF MoDOT SHED. ELEVATION=529.05 SEE PAGE 3*

| NO. | DATE | REVISIONS | BY | APP'D |
|---|---|---|---|---|
| 1 | | | | |
| 2 | | | | |
| 3 | | | | |
| 4 | | | | |
| 5 | | | | |

Designed By: SRS
Drawn By: CLC
Checked By: SRS
Issue Date: 4.19.2012

COPYRIGHT ©-2011 -SHAFER, KLINE & WARREN INC.
MISSOURI CERTIFICATE OF AUTHORITY: F001039850

SHAFER, KLINE & WARREN, INC.
3200 Penn Terrace, Suite 100, Columbia, MO 65202-0001
573/442-4537 FAX: 573/442-4543
OFFICE LOCATIONS: Chillicothe, MO Columbia, MO Houston, TX Iola, KS Kansas City, KS Lenexa, KS Macon, MO North Kansas City, MO Tulsa, OK
CIVIL ENGINEERS ELECTRICAL ENGINEERS MECHANICAL ENGINEERS STRUCTURAL ENGINEERS LANDSCAPE ARCHITECTS LAND SURVEYORS LAND PLANNERS

WAYLAND MoDOT MAINTENANCE FACILITY – WAYLAND, MISSOURI

SEWER EXTENSION
COVER SHEET

110172-010

SHEET NO. 1 OF 10

L:\110172-010_CAD\CIVIL\110172-010 COV PG1.DWG
LAYOUT: COVER | BY: JBRYAN | DATE: 4/19/2012
XREF DWG1: NONE | XREF DWG2: NONE
XREF DWG3: NONE | XREF DWG4: NONE

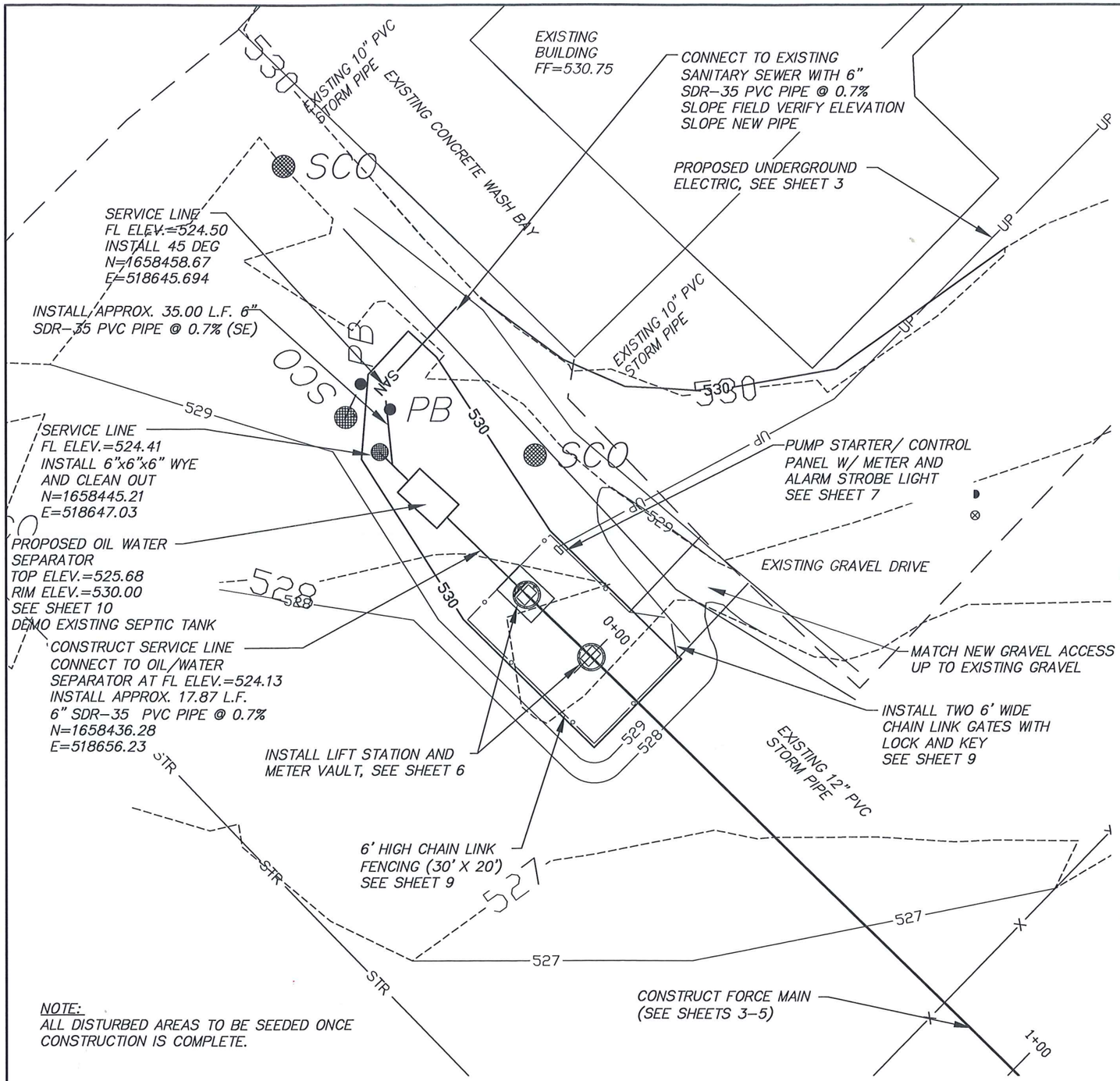


NOTE:
ALL DISTURBED AREAS TO BE SEEDED ONCE CONSTRUCTION IS COMPLETE.

NORTH

20 10 0 20

SCALE : 1" =20'

## LEGEND

| | | | |
|---|---|---|---|
| IB_E | EXISTING IRON BAR | H&V | CONTROL POINT |
| IBPC_E | EXISTING IRON BAR WITH PLASTIC CAP | TBM | TEMPORARY BENCHMARK |
| SSMH | SANITARY SEWER MANHOLE | FPST | FENCE POST |
| WM | WATER METER | WP | WOOD POST |
| WV | WATER VALVE | STNP | STONE POST |
| WFCT | WATER FAUCET | MB | MAIL BOX |
| RW | RIGHT-OF-WAY MARKER | | TREE |
| FH | FIRE HYDRANT | | BUSH |
| TEP | TELEPHONE PEDESTAL | | |
| WS | WOOD SIGN | | |
| MS | METAL SIGN | | |
| GA | GUY ANCHOR | | |
| PP | POWER POLE | | |
| PPU | POWER POLE W/UNDERGROUND | | |
| PPT | POWER POLE WITH TRANSFORMER | | |
| | LIGHT POLE | | |
| PRISR | POWER RISER | | |
| TP | TELEPHONE POLE | | |
| TMH | TELEPHONE MANHOLE | | |
| GREG | GAS REGULATOR | | |

STATE OF MISSOURI
STEVEN R. SCHULTZ
NUMBER PE-2001004664
PROFESSIONAL ENGINEER
04-19-12

STEVEN R. SCHULTZ
PE-2001004664

| NO. | DATE | REVISIONS | BY | APP'D |
|---|---|---|---|---|
| 1 | | | | |
| 2 | | | | |
| 3 | | | | |
| 4 | | | | |
| 5 | | | | |

COPYRIGHT © 2011 -SHAFER, KLINE & WARREN INC.
MISSOURI CERTIFICATE OF AUTHORITY: F0013950

Designed By: SRS
Drawn By: CLC
Checked By: SRS
Issue Date: 4.19.2012

SHAFER, KLINE & WARREN, INC.
1400 Forum Boulevard, Suite 19A, Columbia, MO 65203-1997
573/442-4537 FAX: 573/442-4543
OFFICE LOCATIONS: Chillicothe, MO Columbia, MO Houston, TX Iola, KS Kansas City, MO Lenexa, KS Macon, MO North Kansas City, MO Tulsa, OK
CIVIL ENGINEERS ELECTRICAL ENGINEERS MECHANICAL ENGINEERS STRUCTURAL ENGINEERS LANDSCAPE ARCHITECTS LAND SURVEYORS LAND PLANNERS

WAYLAND MoDOT MAINTENANCE FACILITY - WAYLAND, MISSOURI

LIFT STATION SITE PLAN

110172-010

SHEET NO. 2 OF 10

L:\110172-010_CAD\CIVIL\110172-010 PPFIG2-5.DWG
LAYOUT: SITE FIG2 | BY: JBRYAN | DATE: 4/19/2012
XREF DWG1: NONE | XREF DWG2: NONE
XREF DWG3: NONE | XREF DWG4: NONE

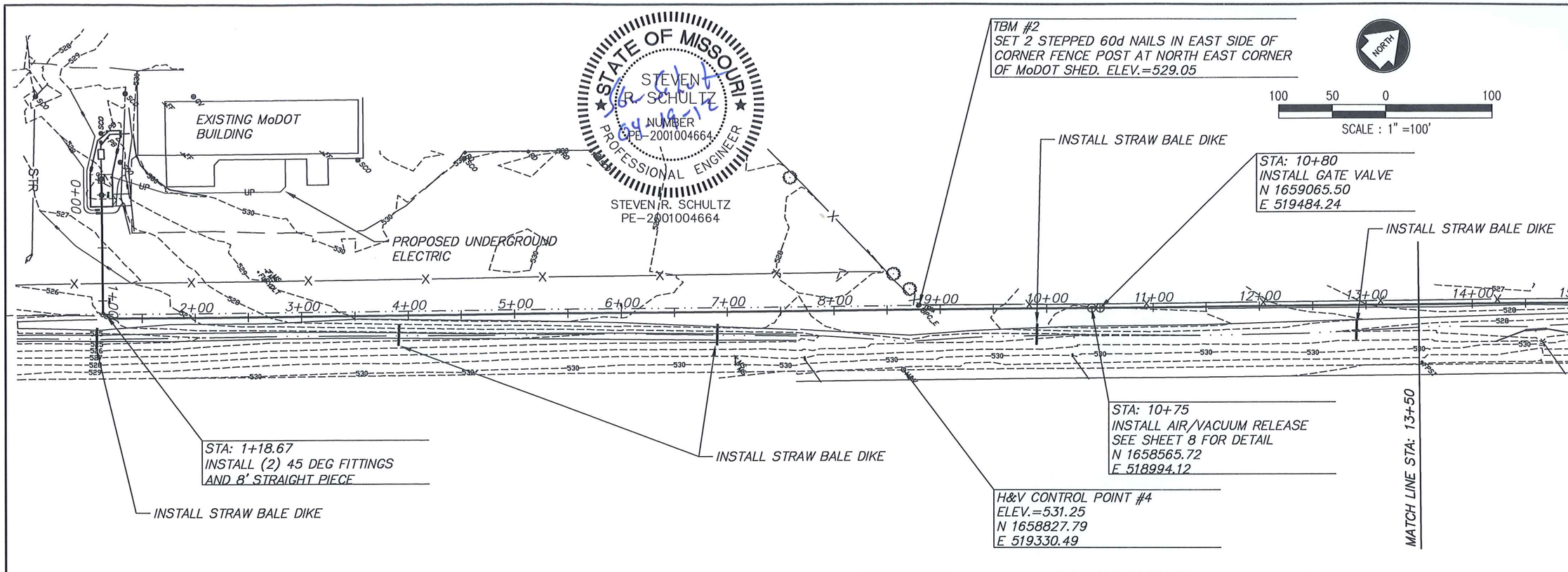


NOTES:
1. CONTRACTOR HAS THE OPTION OF DIRECTIONAL BORING ENTIRE JOB WITH 2" FUSION-WELD SDR-11 WITH PRESSURE RATING OF 160psi
2. CONTRACTOR SHALL PLACE FORCEMAIN WITHIN 6.0' UTILITY CORRIDOR WHERE FEASIBLE.

SCALE:
HORIZONTAL: 1"=100'
VERTICAL: 1"=10'

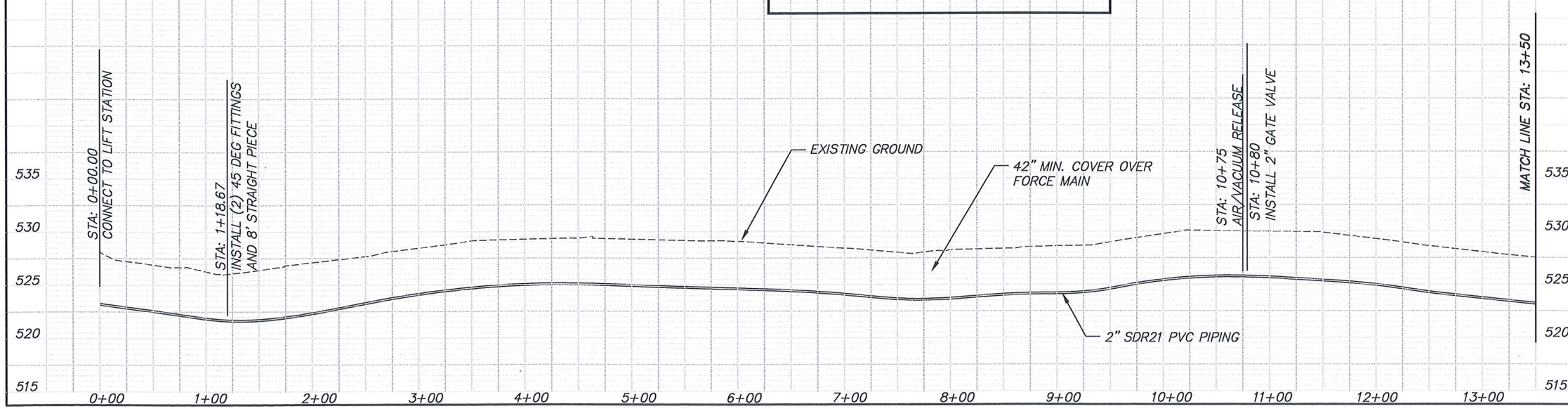


| NO. | DATE | REVISIONS | BY | APP'D |
|---|---|---|---|---|
| 5 | | | | |
| 4 | | | | |
| 3 | | | | |
| 2 | | | | |
| 1 | | | | |

Designed By: SRS
Drawn By: CLC
Checked By: SRS
Issue Date: 4.19.2012

COPYRIGHT © - 2011 - SHAFER, KLINE & WARREN INC.
MISSOURI CERTIFICATE OF AUTHORITY: F001139850

SHAFER, KLINE & WARREN, INC.
1400 Forum Boulevard, Suite 19A, Columbia, MO 65203-1997
573/442-4537 FAX: 573/442-4543
OFFICE LOCATIONS: Chillicothe, MO Columbia, MO Houston, TX Iola, KS Kansas City, MO Lenexa, KS Macon, MO North Kansas City, MO Tulsa, OK
CIVIL ENGINEERS ELECTRICAL ENGINEERS MECHANICAL ENGINEERS STRUCTURAL ENGINEERS LANDSCAPE ARCHITECTS LAND SURVEYORS LAND PLANNERS

WAYLAND MoDOT MAINTENANCE FACILITY - WAYLAND, MISSOURI

PLAN & PROFILE
STA. 0+00 TO STA.13+50

110172-010

SHEET NO. 3 OF 10

L:\110172-010_CAD\DWG\110172-010 PRPG2-5.DWG
LAYOUT: PP RG3 | BY: JBRYAN | DATE: 4/19/2012
XREF DWG1: NONE | XREF DWG2: NONE
XREF DWG3: NONE | XREF DWG4: NONE

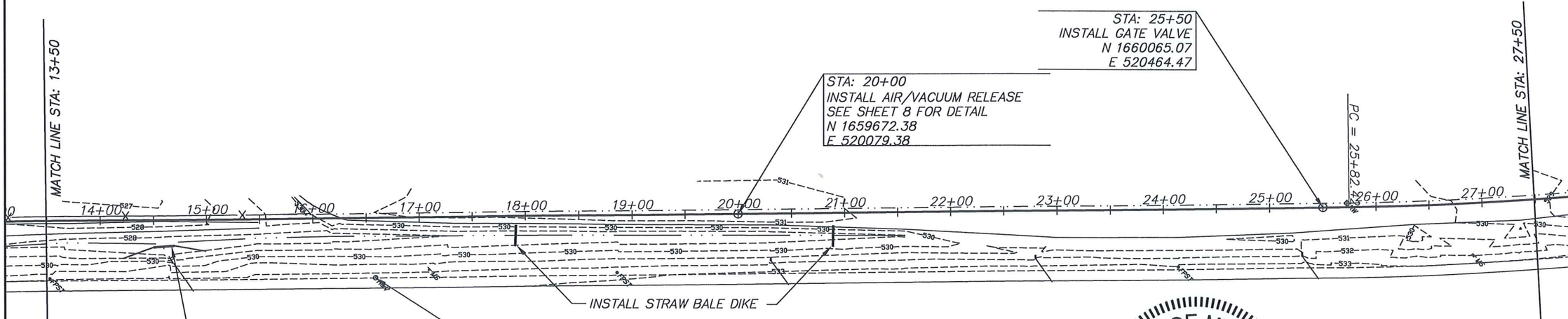


STATE OF MISSOURI
STEVEN R. SCHULTZ
NUMBER
PE-2001004664
PROFESSIONAL ENGINEER
4-19-12

STEVEN R. SCHULTZ
PE-2001004664

NORTH

100 50 0 100
SCALE : 1" =100'

NOTES:
1. CONTRACTOR HAS THE OPTION OF DIRECTIONAL BORING ENTIRE JOB WITH 2" FUSION-WELD SDR-11 WITH PRESSURE RATING OF 160psi
2. CONTRACTOR SHALL PLACE FORCEMAIN WITHIN 6.0' UTILITY CORRIDOR WHERE FEASIBLE.

SCALE:
HORIZONTAL: 1"=100'
VERTICAL: 1"=10'

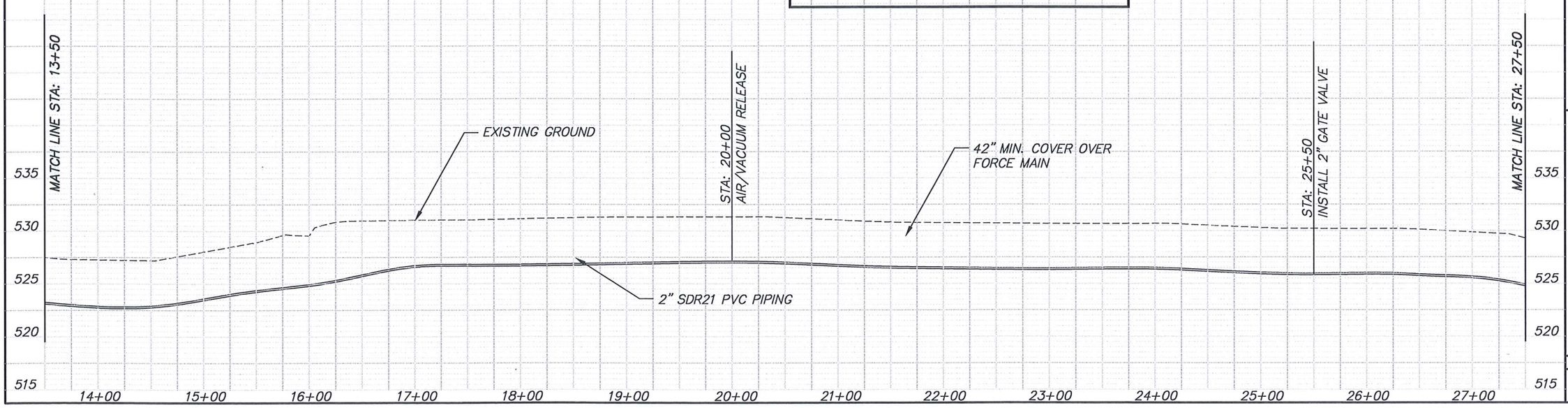


| NO. | DATE | REVISIONS | BY | APP'D |
|---|---|---|---|---|
| 1 | | | | |
| 2 | | | | |
| 3 | | | | |
| 4 | | | | |
| 5 | | | | |

Designed By: SRS
Drawn By: CLC
Checked By: SRS
Issue Date: 4.19.2012

COPYRIGHT © - 2001 - SHAFER, KLINE & WARREN INC.
MISSOURI CERTIFICATE OF AUTHORITY: F001139850

SHAFER, KLINE & WARREN, INC.
1400 Forum Boulevard, Suite 19A, Columbia, MO 65203-1997
573/442-4537 FAX: 573/442-4543
OFFICE LOCATIONS: Chillicothe, MO Columbia, MO Houston, TX Iola, KS Kansas City, MO Lenexa, KS Macon, MO North Kansas City, MO Tulsa, OK
CIVIL ENGINEERS ELECTRICAL ENGINEERS MECHANICAL ENGINEERS STRUCTURAL ENGINEERS LANDSCAPE ARCHITECTS LAND SURVEYORS LAND PLANNERS

WAYLAND MoDOT MAINTENANCE FACILITY - WAYLAND, MISSOURI

PLAN & PROFILE
STA. 13+50 TO STA.27+50

110172-010

SHEET NO. 4 OF 10

L:\110172-010_CAD\CIVIL\110172-010 PRPG2-5.DWG
LAYOUT: PP PG4 | BY: JBRYAN | DATE: 4/19/2012
XREF DWG1: NONE | XREF DWG2: NONE
XREF DWG3: NONE | XREF DWG4: NONE

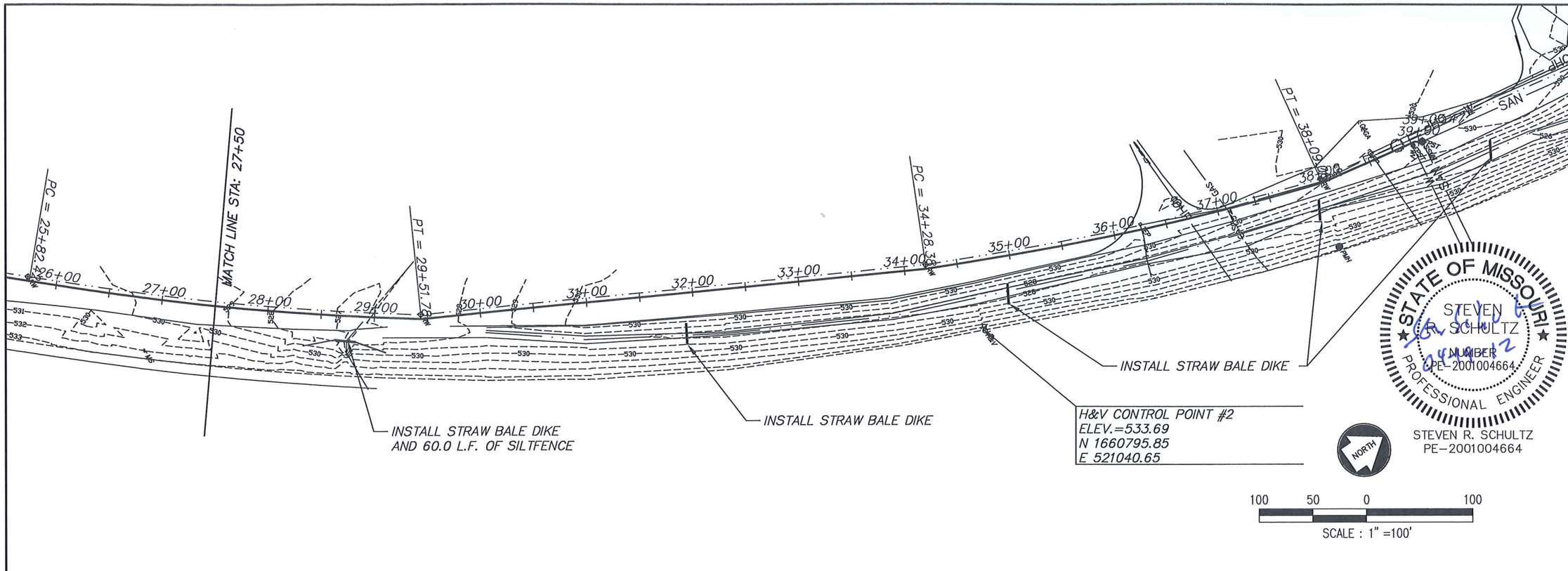


STATE OF MISSOURI
STEVEN R. SCHULTZ
NUMBER PE-2001004664
PROFESSIONAL ENGINEER
STEVEN R. SCHULTZ
PE-2001004664

NOTES:
1. CONTRACTOR HAS THE OPTION OF DIRECTIONAL BORING ENTIRE JOB WITH 2" FUSION-WELD SDR-11 WITH PRESSURE RATING OF 160psi
2. CONTRACTOR SHALL PLACE FORCEMAIN WITHIN 6.0' UTILITY CORRIDOR WHERE FEASIBLE.

SCALE:
HORIZONTAL: 1"=100'
VERTICAL: 1"=10'

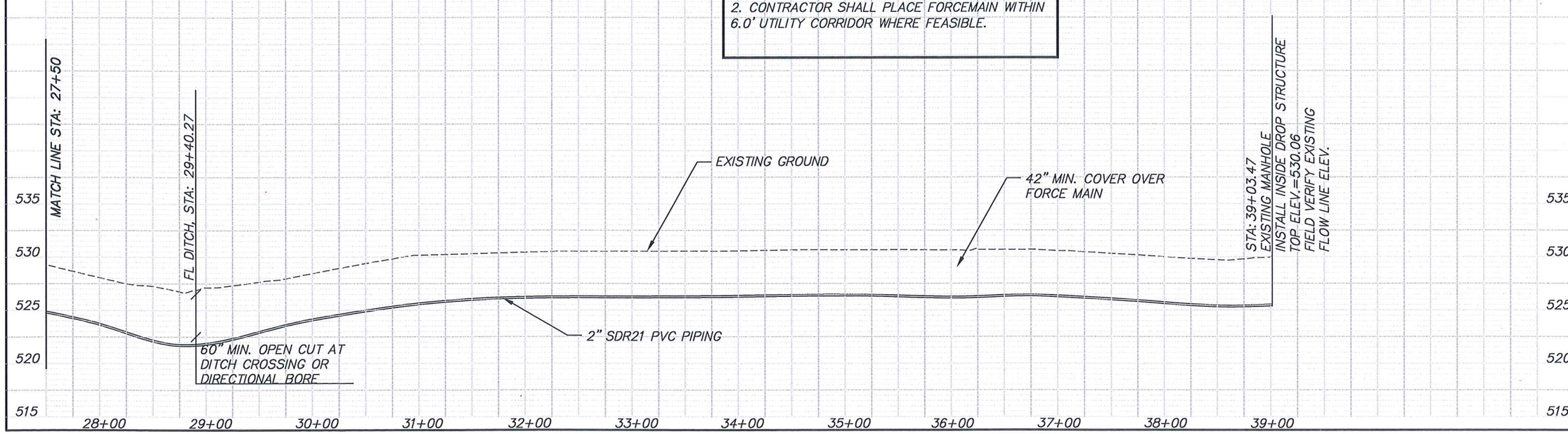


| NO. | DATE | REVISIONS | BY | APP'D |
|---|---|---|---|---|
| 5 | | | | |
| 4 | | | | |
| 3 | | | | |
| 2 | | | | |
| 1 | | | | |

COPYRIGHT © - 2011 - SHAFER, KLINE & WARREN INC.
MISSOURI CERTIFICATE OF AUTHORITY: F0013985O

Designed By: SRS
Drawn By: CLC
Checked By: SRS
Issue Date: 4.19.2012

SHAFER, KLINE & WARREN, INC.
1400 Forum Boulevard, Suite 19A, Columbia, MO 65203-1997
573/442-4537 FAX: 573/442-4543
OFFICE LOCATIONS: Chillicothe, MO Columbia, MO Houston, TX Iola, KS Kansas City, MO Lenexa, KS Macon, MO North Kansas City, MO Tulsa, OK
CIVIL ENGINEERS ELECTRICAL ENGINEERS MECHANICAL ENGINEERS STRUCTURAL ENGINEERS LANDSCAPE ARCHITECTS LAND SURVEYORS LAND PLANNERS

WAYLAND MoDOT MAINTENANCE FACILITY - WAYLAND, MISSOURI

PLAN & PROFILE
STA. 27+50 TO STA.39+03.47

110172-010

SHEET NO. 5 OF 10

L:\110172-010_CAD\DWG\110172-010 PPPG2-5.DWG
LAYOUT: PP PG5 | BY: JBRYAN | DATE: 4/19/2012
XREF DWG1: NONE | XREF DWG2: NONE
XREF DWG3: NONE | XREF DWG4: NONE

## NON-CLOG PUMP STATION TABLE

| STATION | WETWELL DIA | WETWELL HATCH | DISCHARGE PIPE SIZE | TOP SLAB ELEV. | WETWELL INV. ELEV. | DIM "A" | DIM. "B" | DIM. "C" | DIM. "D" |
|---|---|---|---|---|---|---|---|---|---|
| MoDOT MAINT FACILITY | 60" DIA. CONCRETE | 30" x48" MIN. | 2" | 530.00 | 516.50 (FIELD VERIFY) | 18" | 12" | 6" | 6" |
| – | – | – | – | – | – | – | – | – | – |

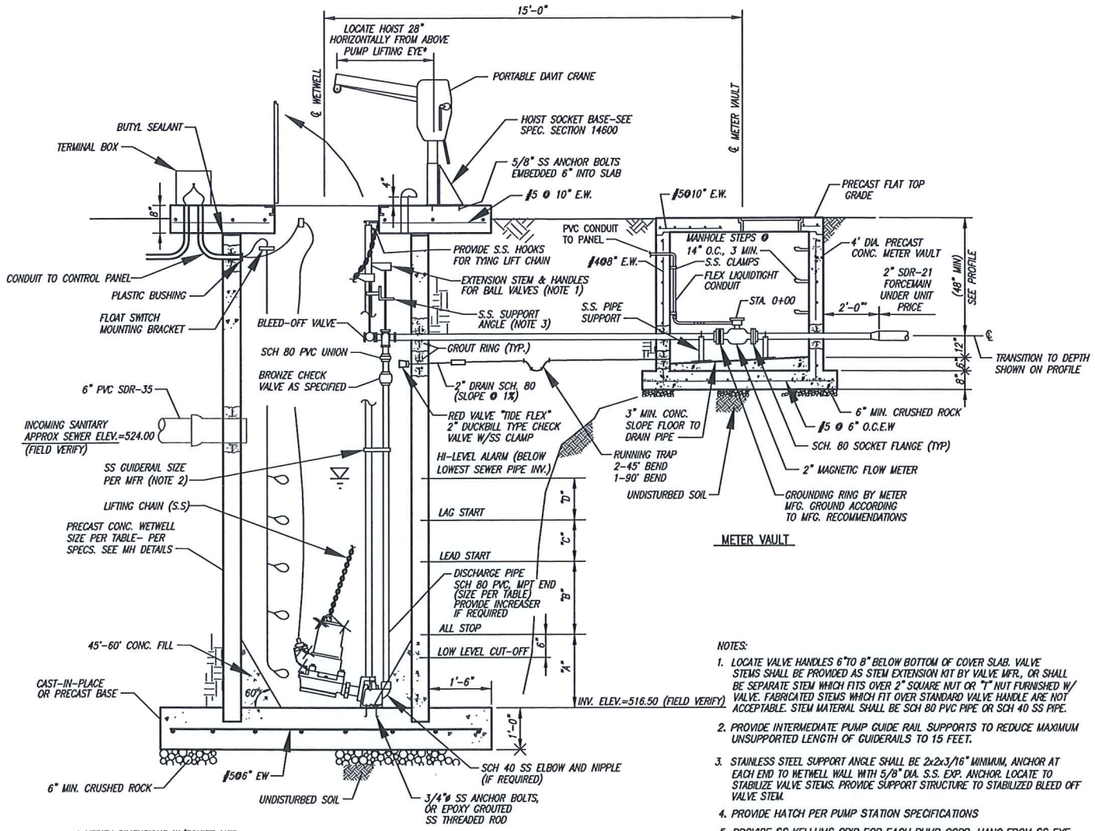


METER VAULT

* VERIFY DIMENSIONS W/EQUIPT MFR.

SECTION

NOTES:

1. LOCATE VALVE HANDLES 6"TO 8" BELOW BOTTOM OF COVER SLAB. VALVE STEMS SHALL BE PROVIDED AS STEM EXTENSION KIT BY VALVE MFR., OR SHALL BE SEPARATE STEM WHICH FITS OVER 2" SQUARE NUT OR "T" NUT FURNISHED W/ VALVE. FABRICATED STEMS WHICH FIT OVER STANDARD VALVE HANDLE ARE NOT ACCEPTABLE. STEM MATERIAL SHALL BE SCH 80 PVC PIPE OR SCH 40 SS PIPE.
2. PROVIDE INTERMEDIATE PUMP GUIDE RAIL SUPPORTS TO REDUCE MAXIMUM UNSUPPORTED LENGTH OF GUIDERAILS TO 15 FEET.
3. STAINLESS STEEL SUPPORT ANGLE SHALL BE 2x2x3/16" MINIMUM, ANCHOR AT EACH END TO WETWELL WALL WITH 5/8" DIA. S.S. EXP. ANCHOR. LOCATE TO STABILIZE VALVE STEMS. PROVIDE SUPPORT STRUCTURE TO STABILIZED BLEED OFF VALVE STEM.
4. PROVIDE HATCH PER PUMP STATION SPECIFICATIONS
5. PROVIDE SS KELLUMS GRIP FOR EACH PUMP CORD. HANG FROM SS EYE HOOK ANCHORED TO VERTICAL FACE OF HATCH OPENING ON EACH SIDE.
6. CONTRACTOR SHALL PAY ATTENTION TO THE PIPING LAYOUT, TO ENSURE THAT THE HATCH LOCATION AND PUMP BASE LOCATION ALLOWS ROOM IN WETWELL FOR FULL WIDTH OF DISCHARGE HEADER. CONTRACTOR SHALL BEFORE PRE-CASTING LID, SUBMIT TO THE ENGINEER A SCALED SKETCH WITH DIMENSIONS, SHOWING:PUMP LOCATION, HATCH SIZE AND LOCATION, RISER PIPE LOCATION, AND DISCHARGE HEADER LOCATION. THIS SKETCH SHALL BE USED FOR THE INSTALLATION OF COMPONENTS. OFFSET OF PUMP RISERS MAY BE NECESSARY, AND IF SO SHALL BE DONE WITH SCHEDULE 80 22 1/2° BENDS (45° BENDS WILL NOT BE PERMITTED)

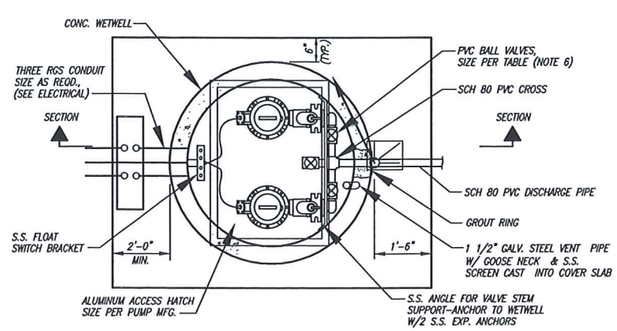


PLAN

NOTE: SEE SITE PLAN FOR ACTUAL ORIENTATION OF PIPING, CONTROL PANEL, AND ELECTRICAL.

* VERIFY DIMENSIONS W/EQUIPT MFR.

PUMP STATION ARRANGEMENT PLAN

NO SCALE

STATE OF MISSOURI
STEVEN R. SCHULTZ
NUMBER PE-2001004664
PROFESSIONAL ENGINEER
4/25/12

STEVEN R. SCHULTZ
PE-2001004664

| NO. | DATE | REVISIONS | BY | APP'D |
|---|---|---|---|---|
| 1 | | | | |
| 2 | | | | |
| 3 | | | | |
| 4 | | | | |
| 5 | | | | |

Designed By: SRS
Drawn By: CLC
Checked By: SRS
Issue Date: 4.13.2012

COPYRIGHT © - 2011 - SHAFER, KLINE & WARREN INC.
MISSOURI CERTIFICATE OF AUTHORITY: F00139850

SHAFER, KLINE & WARREN, INC.
3200 Penn Terrace, Suite 100, Columbia, MO 65202-0001
573/442-4537 FAX: 573/442-4543
OFFICE LOCATIONS: Chillicothe, MO Columbia, MO Houston, TX Iola, KS Kansas City, KS Lenexa, KS Macon, MO North Kansas City, MO Tulsa, OK
CIVIL ENGINEERS ELECTRICAL ENGINEERS MECHANICAL ENGINEERS STRUCTURAL ENGINEERS LANDSCAPE ARCHITECTS LAND SURVEYORS LAND PLANNERS

WAYLAND MoDOT MAINTENANCE FACILITY - WAYLAND, MISSOURI

PUMP STATION DETAILS

110172-010

SHEET NO. 6 OF 10

L:\110172-010_CAD\CIVIL\110172-010 DET PG6-10.DWG
LAYOUT: PS DET PG6 | BY: JBRYAN | DATE: 4/25/2012
XREF DWG1: NONE | XREF DWG2: NONE
XREF DWG3: NONE | XREF DWG4: NONE

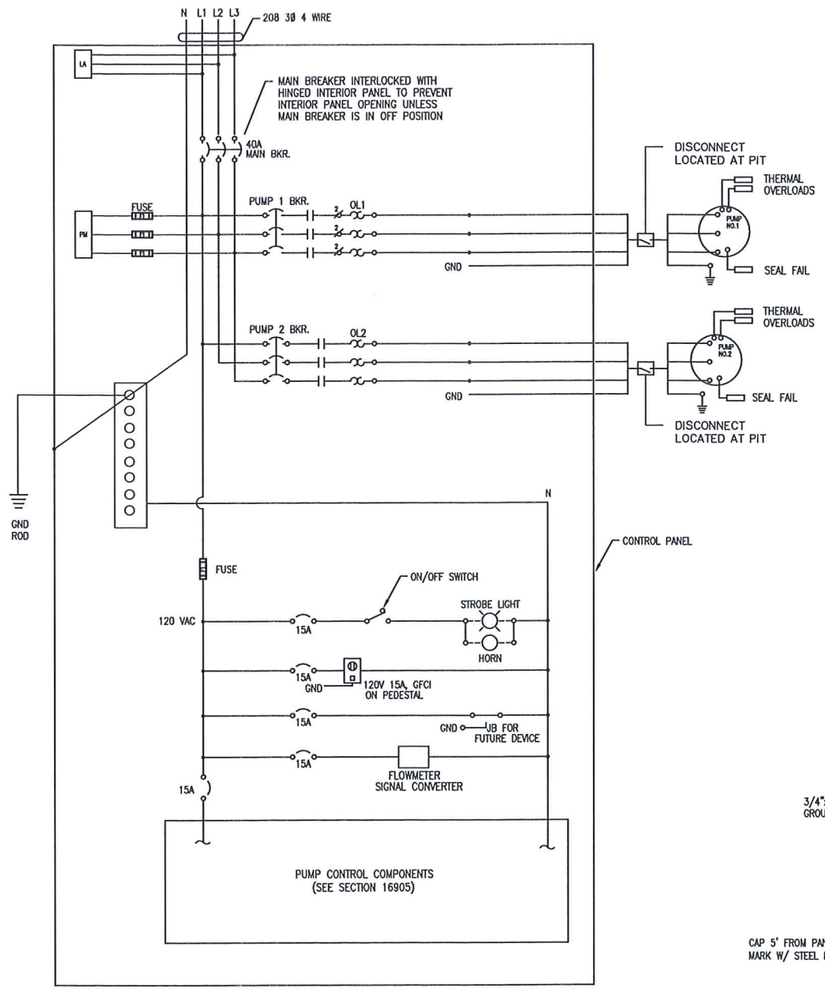


DUPLEX PUMP CONTROL PANEL SCHEMATIC

## LEGEND

| | |
|---|---|
| M1,M2 | – MOTOR CONTACTORS |
| OL1,OL2 | – OVERLOADS |
| TP1,TP2 | – THERMAL PROTECTORS |
| GND | – EQUIP. GROUND, GROUND |
| EA | – ELECTRIC ALTERNATOR |
| FS5 | – FLOAT SWITCH LOW WATER CUTOFF |
| FS4 | – FLOAT SWITCH 1– PUMP OFF |
| FS3 | – FLOAT SWITCH 2– PUMP ON |
| FS2 | – FLOAT SWITCH 3– LAG PUMP ON |
| FS1 | – FLOAT SWITCH 4– |
| | WIRING WITHIN PANEL |
| | FIELD WIRING |
| | CONTROL PANEL TERMINALS |
| | EQUIP. TERMINALS |
| LA | LIGHTING ARRESTOR |
| | ULTRASAFE FUSES, DISCONNECT RATED WITH INDICATOR "FUSE–BLOWN" |
| | CIRCUIT BREAKER |
| | MOTOR STARTER WITH OVERLOAD |
| PM | PHASE MONITOR RELAY |

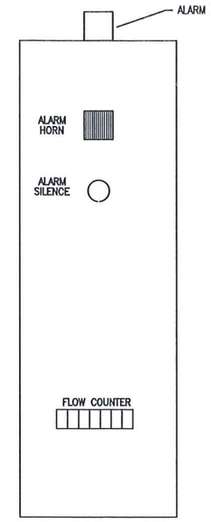


SIDE OF ENCLOSURE
NO SCALE

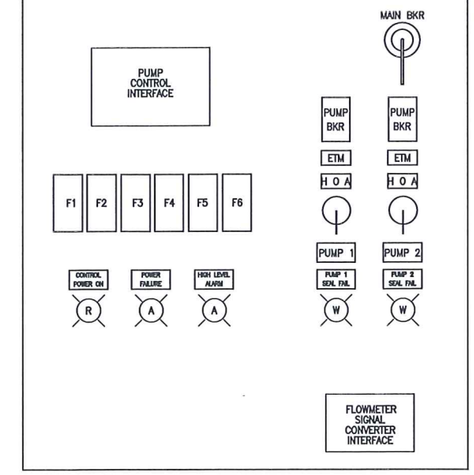


INNER SUB PANEL LAYOUT
NO SCALE

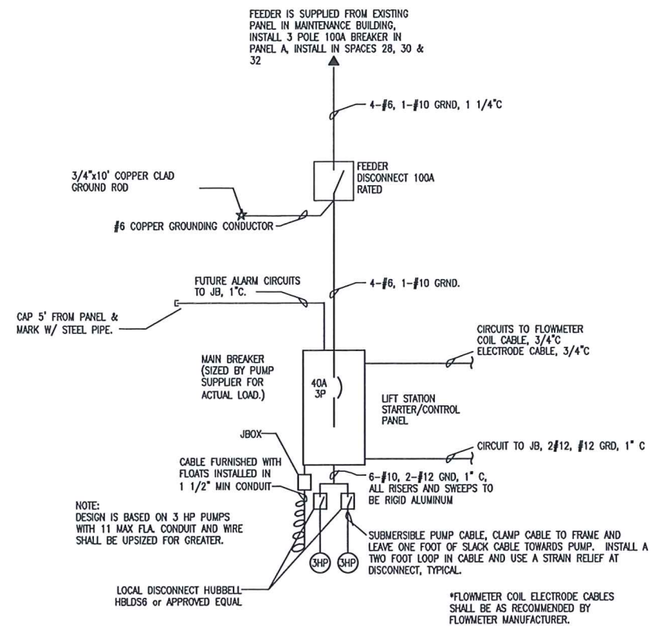


DUPLEX ONE–LINE
NO SCALE

## ELECTRIC SERVICE UPGRADE NOTES

1. EXISTING ELECTRIC SERVICE IS 208 VOLT, 3 PHASE WIRE.

## GENERAL ELECTRIC NOTES

1. ALL INSTALLATION SHALL CONFORM TO THE LATEST EDITION OF THE NATIONAL ELECTRIC CODE (NEC) AND ANY OTHER APPLICABLE STATE AND LOCAL CODES.
2. ALL ELECRICAL DEVICES & ENCLOSURES LOCATED OUTSIDE SHALL BE WEATHERPROOF & RATED FOR EXTERIOR USE, NEMA 4X, SST OR CALLED OUT.
3. ALL CONDUCTORS SHALL BE COPPER STANDARD, THWN, 600V.
4. ELECTRICAL CONTRACTOR/SUPPLIER SHALL BE RESPONSIBLE FOR COORDINATION OF OVERLOAD PROECTION WITH ACTUAL FULL LOAD AMPERAGE AND WIRE SIZING.
5. ALL BURIED CONDUIT SHALL BE PVC SHCEDULE 80.
6. ALL INTERIOR CONDUIT SHALL BE RIDGID ALUMINUM.

STATE OF MISSOURI
STEVEN R. SCHULTZ
NUMBER PE-2001004664
PROFESSIONAL ENGINEER
04-19-12

STEVEN R. SCHULTZ
PE–2001004664

| NO. | DATE | REVISIONS | BY | APP'D |
|---|---|---|---|---|
| 1 | | | | |
| 2 | | | | |
| 3 | | | | |
| 4 | | | | |
| 5 | | | | |

COPYRIGHT © - 2011 - SHAFER, KLINE & WARREN INC.
MISSOURI CERTIFICATE OF AUTHORITY: F00139850

Designed By: SRS
Drawn By: CLC
Checked By: SRS
Issue Date: 4.19.2012

SHAFER, KLINE & WARREN, INC.
3200 Penn Terrace, Suite 100, Columbia, MO 65202–0001
573/442–4537 FAX: 573/442–4543
OFFICE LOCATIONS: Chillicothe, MO Columbia, MO Houston, TX Iola, KS Kansas City, KS Lenexa, KS Macon, MO North Kansas City, MO Tulsa, OK
CIVIL ENGINEERS ELECTRICAL ENGINEERS MECHANICAL ENGINEERS STRUCTURAL ENGINEERS LANDSCAPE ARCHITECTS LAND SURVEYORS LAND PLANNERS

WAYLAND MoDOT MAINTENANCE FACILITY – WAYLAND, MISSOURI

ELECTRICAL DETAILS

110172–010

SHEET NO. 7 OF 10

LAYOUT: ELE DET PG7 | BY: JBRYAN | DATE: 4/19/2012
XREF DWG1: NONE | XREF DWG2: NONE
XREF DWG3: NONE | XREF DWG4: NONE
L:\110172-010_CAD\DWG\110172-010 DET PG6-10.DWG

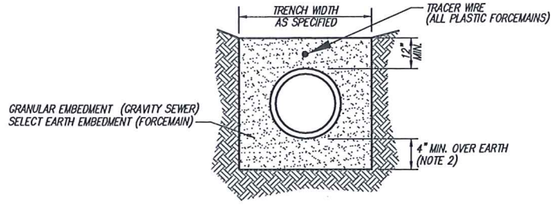


CLASS B-1

PROVIDE FOR: GRAVITY SEWERS
PVC FORCEMAIN

NOTES:

1. REFER TO THE EARTHWORK AND TRENCHING SPECIFICATIONS FOR TRENCH WIDTH & COMPACTION REQUIREMENTS.
2. DIMENSION OVER ROCK SHALL BE B/4, 6" MIN.

**PIPE EMBEDMENT DETAILS**

NO SCALE

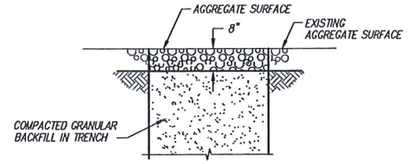


**AGGREGATE SURFACED AREA**

NO SCALE

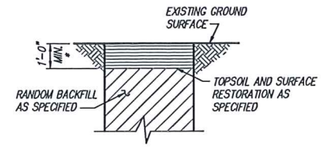


* 2'-0" MINIMUM IN ESTABLISHED GARDENS

**GRASSED AREA TRENCH BACKFILL DETAIL**

NO SCALE

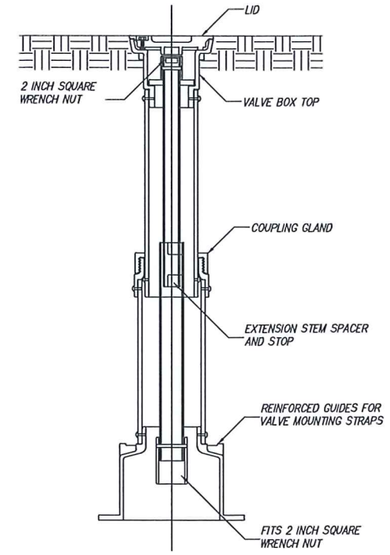


**ADJUSTABLE VALVE BOX DETAIL**

STATE OF MISSOURI
STEVEN R. SCHULTZ
NUMBER PE-2001004664
PROFESSIONAL ENGINEER

STEVEN R. SCHULTZ
PE-2001004664

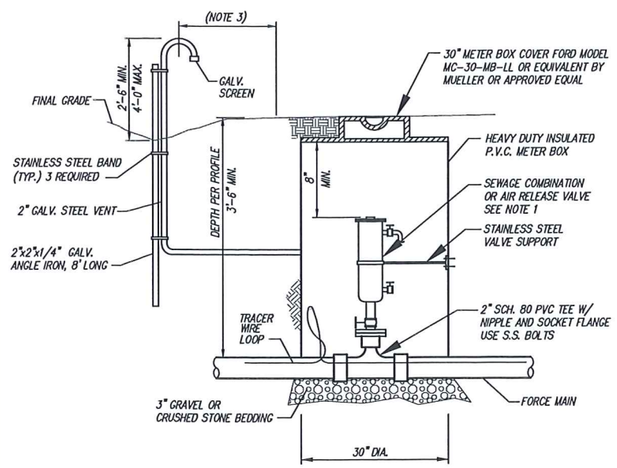


NOTES:

1. SEWAGE COMBINATION AIR RELEASE AND AIR/ VACUUM VALVES SHALL BE VALMATIC "VM-301-ASV-M OR ENGINEER APPROVED EQUAL. INLET SHALL BE 2" NPT. UNLESS OTHERWISE NOTED ON THE PLANS OR PROFILES, OUTLET SIZE SHALL BE 1" NPT AND AIR RELEASE ORIFICE SHALL BE 5/16". VALVES SHALL BE PROVIDED WITH FLUSHING ATTACHMENT, INCLUDING BRONZE SHUT-OFF AND FLUSHING BALL VALVES, QUICK CONNECTION COUPLING, AND 5' OF RUBBER HOSE, FOR BACK WASHING WITH CLEAR WATER. THE UNIT SHALL BE COATED WITH AWWA C550 FUSION BONDED EPOXY OR 2-PART EPOXY.
2. LOCATE GOOSENECK AT RIGHT OF WAY.
3. IF HEIGHT OF VAULT CAUSES FRAME AND COVER TO BE ABOVE GRADE, PERFORM GRADING TO PROVIDE A SMOOTH TRANSITION. DO NOT LOCATE VAULT TO OBSTRUCT DITCH. IF NECESSARY, OFFSET ALIGNMENT AT VAULT TO AVOID PLACING STRUCTURE IN DITCH FLOWLINE. ROTATE TOP RING AND COVER TO AVOID DITCH FLOW LINE.
4. ALL VALVE VAULTS SHALL HAVE A MARKER POST LOCATED AT THE RIGHT OF WAY. MARKER POSTS SHALL BE USA BLUE BOOK FORCEMAIN, "STOCK NO. 70474".

"RHINO 3-RAIL STOCK NO. 70457" WITH DECAL INDICATING SEWER

**COMBINATION OR AIR RELEASE VALVE & VAULT**

NO SCALE

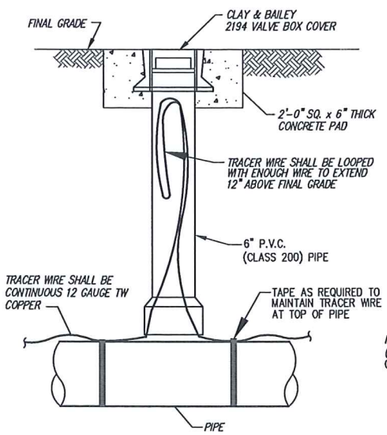


**TRACER WIRE TEST STATION**

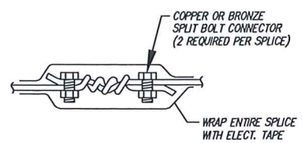


**TRACER WIRE SPLICE**

NOTES:

1. INSTALL TEST STATIONS AT LOCATIONS ALONG SEWER FORCEMAIN AT INTERVALS NOT TO EXCEED 600 FEET. AIR VALVE VAULTS SHALL BE USED AS TEST STATIONS.
2. AT TRACER WIRE TEST STATION THE TRACER WIRE SHALL BE LOOPED WITH ENOUGH WIRE TO EXTEND 12" ABOVE GRADE. THE LOOP SHALL BE PLACED IN AN ORGANIZED FASHION WITHIN THE TEST STATION WHICH DOES NOT INTERFERE WITH ENTRY OR MAINTENANCE.
3. ALL TEST STATIONS SHALL HAVE A MARKER POST LOCATED AT THE RIGHT OF WAY. MARKER POSTS SHALL BE USA BLUE BOOK RHINO 3-RAIL STOCK NO. 70457 WITH DECAL INDICATING SEWER FORCEMAIN STOCK NO. 70474.

**TRACER WIRE DETAILS**

NO SCALE

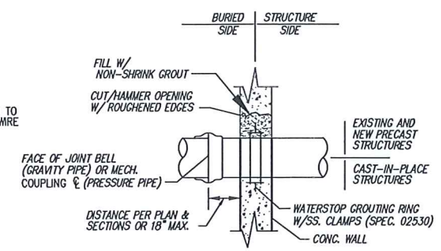


NOTE: THIS DETAIL APPLIES TO ALL PIPES GROUTED INTO NEW AND EXISTING STRUCTURES.

**GROUT RING**

NO SCALE

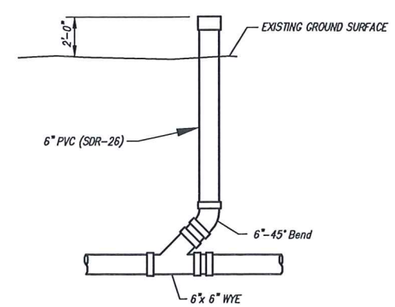


**TYPICAL CLEAN OUT DETAIL**
**(GRAVITY SEWER)**

NO SCALE

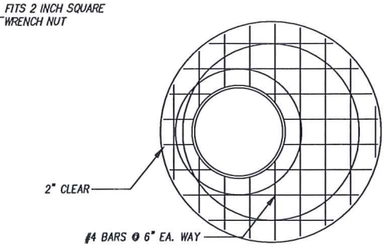


PLAN VIEW

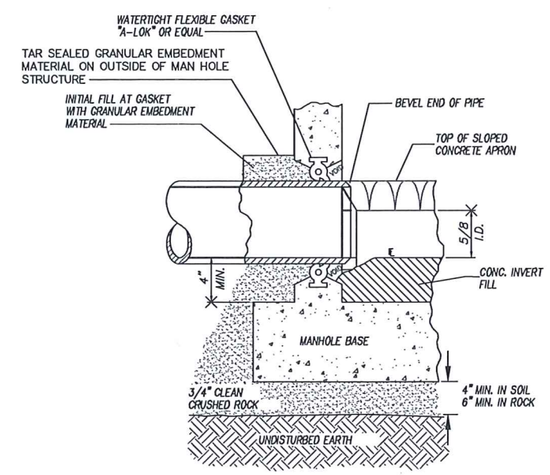


NOTE:

1. BITUMINOUS COATING ON EXTERIOR SURFACE OF MANHOLE SHALL NOT COME IN CONTACT WITH PIPE GASKET.
2. FOR CAST-IN-PLACE CONCRETE MANHOLES OR PRE-CAST WITH BOX-OUTS, THE PIPE GASKET SHALL BE A RUBBER LABYRINTH WATERSTOP WITH STAINLESS STEEL CLAMPING BANDS LOCATED AT CENTER OF WALL AND THE SPACE BETWEEN PIPE & WALL COMPLETELY GROUTED WITH NONSHRINKING MORTAR.
3. PIPE MAY PROJECT 1" MAXIMUM PAST INSIDE WALL OF MANHOLE. BUT NO CONTACT BETWEEN PIPE & INVERT.

MANHOLE GASKET DETAIL

| NO. | DATE | REVISIONS | BY | APP'D |
|---|---|---|---|---|
| 5 | | | | |
| 4 | | | | |
| 3 | | | | |
| 2 | | | | |
| 1 | | | | |

Designed By: SRS
Drawn By: CLC
Checked By: SRS
Issue Date: 4.19.2012

COPYRIGHT ©-2011 -SHAFER, KLINE & WARREN INC.
MISSOURI CERTIFICATE OF AUTHORITY: F001398SO

SHAFER, KLINE & WARREN, INC.
3200 Penn Terrace, Suite 100, Columbia, MO 65202-0001
573/442-4537 FAX: 573/442-4543
OFFICE LOCATIONS: Collinsville, IL; Columbia, MO; Houston, TX; Iola, KS; Kansas City, MO; Lenexa, KS; Macon, MO; North Kansas City, MO; Tulsa, OK
CIVIL ENGINEERS ELECTRICAL ENGINEERS MECHANICAL ENGINEERS STRUCTURAL ENGINEERS LANDSCAPE ARCHITECTS LAND SURVEYORS LAND PLANNERS

WAYLAND MoDOT MAINTENANCE FACILITY - WAYLAND, MISSOURI

MISC DETAILS

110172-010

SHEET NO. 8 OF 10

L:\110172-010_CAD\CIVIL\110172-010 DET PG6-10.DWG
LAYOUT: MISC. DET PG6 | BY: JBRYAN | DATE: 4/19/2012
XREF DWG1: NONE | XREF DWG2: NONE
XREF DWG3: NONE | XREF DWG4: NONE

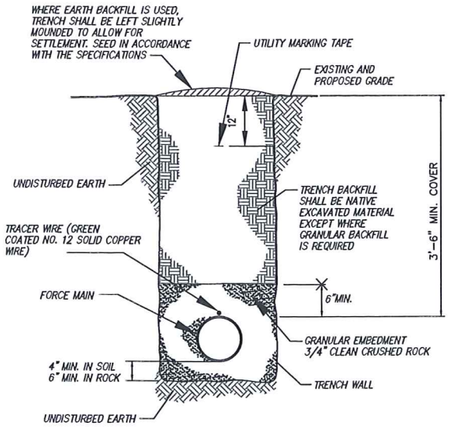


LOW PRESSURE SEWER MAINS

NOTES:

1. UNDERGROUND MARKING TAPE MARKED "CAUTION SEWER LINE BURIED BELOW" BY TERRA TAPE OR APPROVED EQUAL, LOCATED 12" BELOW FINISH GRADE.

2. TRACER WIRE FOR SEWER PIPELINE AND DISCHARGE PIPING, HIGH MOLECULAR WEIGHT – POLYETHYLENE TRACER WIRE, 1–#14 AWG, BY PAIGE ELECTRIC OR APPROVED EQUAL. SPLICING SHALL BE WITH 3M DBY/DBR DIRECT BURY SPLICE KITS. TRACER WIRE LEAD CONNECTIONS TO BE LOCATED IN "AIR RELEASE VALVE VAULT".

PIPE INSTALLATION DETAILS

NO SCALE

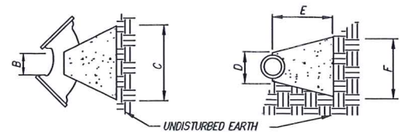


| BENDS | B | C | D | E | F |
|---|---|---|---|---|---|
| 2"–3" 11 1/4 DEG | 8" | 15" | 10" | 24" | 12" |
| 2"–3" 22 1/2 DEG | 8" | 19" | 10" | 24" | 13" |
| | | | | | |
| 4" 11 1/4 DEG | 8" | 15" | 12" | 24" | 13" |
| 4" 22 1/2 DEG | 8" | 19" | 12" | 24" | 13" |
| 6" 11 1/4 DEG | 8" | 15" | 12" | 24" | 12" |
| 6" 22 1/2 DEG | 8" | 19" | 12" | 24" | 13" |

| BENDS | B | C | D | E | F |
|---|---|---|---|---|---|
| 2"–3" 45 DEG. | 8" | 30" | 10" | 24" | 14" |
| 2"–3" 90 DEG. | 8" | 30" | 10" | 24" | 27" |
| | | | | | |
| 4" 90 DEG. | 8" | 30" | 12" | 24" | 27" |
| 4" 90 DEG. | 8" | 30" | 12" | 24" | 27" |
| 6" 45 DEG. | 8" | 30" | 12" | 24" | 14" |
| 6" 90 DEG. | 8" | 30" | 12" | 24" | 27" |

THRUST BLOCKS SHALL BE POURED CONCRETE

TYPICAL CONCRETE THRUST BLOCKS

NO SCALE

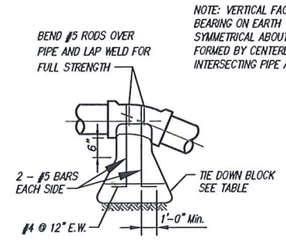


NOTE: VERTICAL FACE OF BEARING ON EARTH TO BE SYMMETRICAL ABOUT PLANE FORMED BY CENTERLINES OF INTERSECTING PIPE ALIGNMENTS.

REQUIRED CU. FT. CONCRETE FOR TIE DOWN BLOCKS

| BEND | PIPE SIZE | |
|---|---|---|
| | 4" | 2" |
| 90° | 18 | 18 |
| 45° | 11 | 11 |
| 22 1/2° | 9 | 9 |
| 11 1/4° | 5 | 5 |

NOTE: CONSTRUCT BACKING BLOCK AT ALL FITTINGS AND HYDRANTS

CONCRETE TIE DOWN BLOCK

NO SCALE

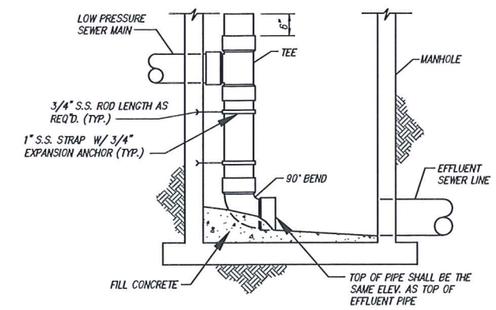


LOW PRESSURE SEWER MAIN CONNECTION AT MANHOLE

NO SCALE

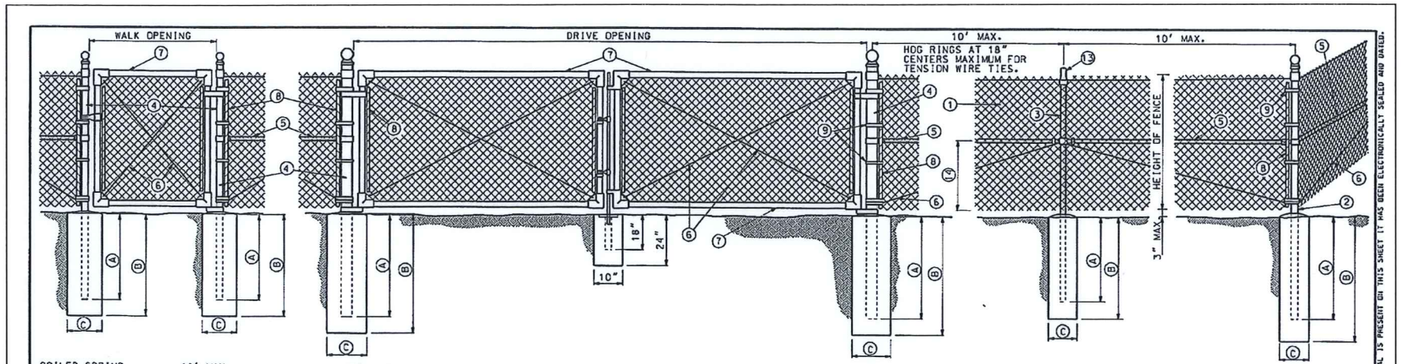


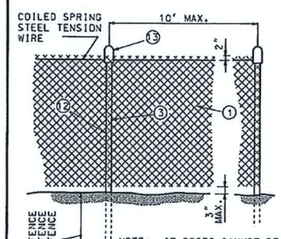


NOTE: IF POSTS CANNOT BE DRIVEN TO DEPTHS INDICATED BECAUSE OF ROCKY SOILS OR OTHER CONDITIONS. THEY SHALL BE REMOVED AND RE-PLACED IN FOOTINGS. POST TOPS SHALL BE PROTECTED AGAINST DAMAGE AND ALL POSTS WHICH ARE DAMAGED DURING INSTALLATION SHALL BE REMOVED AND REPLACED.

ALTERNATE LINE POST ANCHORAGE (DRIVEN)

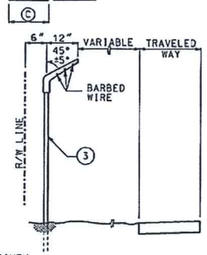


BARBED WIRE EXTENSION BRACKET

LEGEND

1. FABRIC
2. END, CORNER OR PULL POST
3. LINE POST
4. GATE POST
5. BRACE
6. TRUSS ROD
7. GATE FRAME
8. STRETCHER BAR 1" X 1/4" PLATE
9. STRETCHER BAR BAND
10. END OR CORNER CLAMP
11. POST TOPS (OTHER THAN LINE POSTS)
12. FABRIC TIES
13. LINE POST TOPS WITH OR WITHOUT TOP RAILS
14. ONE-HALF FABRIC HEIGHT OR AS RECOMMENDED BY MANUFACTURER

MINIMUM DEPTH FOR SETTING POSTS

| DESCRIPTION | | HEIGHT OF FENCE | | |
|---|---|---|---|---|
| | | 48" | 60" | 72" |
| | | SIZE (IN.) | SIZE (IN.) | SIZE (IN.) |
| 2 ENDCORNER & PULLPOST | (A) | 30" | 36" | 36" |
| | (B) | 36" | 42" | 42" |
| | (C) | 10" | 12" | 12" |
| 3 LINE POST | (A) | 24" | 27" | 36" |
| | (B) | 30" | 36" | 42" |
| | (C) | 10" | 12" | 12" |
| 4 GATE POST | (A) | 30" | 36" | 36" |
| | (B) | 36" | 42" | 42" |
| | (C) | 10" | 12" | 12" |

MINIMUM SIZE FOR FENCE HARDWARE

| | WIDTH | SIZE (IN.) | LBS/FT. |
|---|---|---|---|
| 2 END CORNER OR PULL POST | N/A | 2 1/2 DIA. | 5.79 |
| 3 LINE POST | N/A | 2" DIA. | 3.65 |
| 4 GATE POST (SINGLE GATE OR 1 LEAF OF DOUBLE) | ≤ 6' | 2 1/2 DIA. | 5.79 |
| | ≤ 13' | 3 1/2 DIA. | 9.10 |
| | ≤ 18' | 6 DIA. | 18.97 |
| | > 18' | 8 DIA. | 24.70 |
| 5 BRACE | N/A | 1 1/2 DIA. | 2.27 |
| 6 TRUSS ROD | N/A | 3/8 | - |
| 7 GATE FRAME | N/A | 1 1/2 DIA. | 2.72 |

WIRE SIZE AND HEIGHT OF FABRIC

| SPECIFIED DIAMETER | | | HEIGHT OF FABRIC INCHES |
|---|---|---|---|
| INCHES | GAGE | MESH INCHES | |
| 0.120 | 11 | 2 | 36, 42 |
| 0.148 | 9 | 2 | 48, 60 |
| 0.192 | 6 | 2 | 72, 84 |

GENERAL NOTES:

WEIGHTS OF MATERIALS SHOWN IN TABLE ARE FOR ASTM F 1043, GROUP IA. SIZES SHOWN ARE FOR STEEL AND ALUMINUM. EQUIVALENT ASTM F 1043 ALTERNATIVES MAY BE USED.

PULL POSTS SHALL BE USED AT SHARP BREAKS IN VERTICAL GRADE OR AT APPROXIMATE 500' CENTERS ON STRAIGHT RUNS OR AS DIRECTED BY THE ENGINEER.

DRILLED HOLES ⓓ IN SOLID ROCK SHALL PROVIDE A DIAMETER OF NOT LESS THAN 2" GREATER THAN THE MAXIMUM TRANSVERSE DIMENSION OF THE POST SECTION.

ALL POSTS SHALL HAVE PROVISIONS TO SECURELY HOLD THE TOP TENSION WIRE IN POSITION AND ALLOW FOR REMOVAL AND REPLACEMENT OF A POST WITHOUT DAMAGING THE TOP TENSION WIRE.

THE MESH SIZE SHALL BE 2 INCHES ±1/4 IN. MEASURED IN EITHER DIRECTION AS THE MINIMUM CLEAR DISTANCE BETWEEN THE WIRES FORMING THE PARALLEL SIDES OF THE MESH.

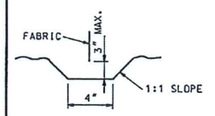


TYPICAL TRENCH DETAILS

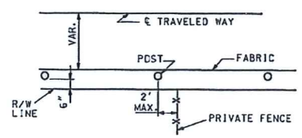


TYPICAL LOCATION

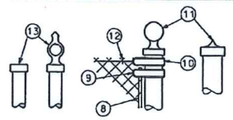

POST TOPS TO BE PRESSURE FITTED OR SCREWED. POST TOPS MAY BE ELIMINATED FOR ALL POSTS EXCEPT PIPE POSTS. IF POST TOPS ARE ELIMINATED, POST LENGTH SHALL BE INCREASED 3".

POST TOPS

MISSOURI HIGHWAYS AND TRANSPORTATION COMMISSION
105 WEST CAPITOL
JEFFERSON CITY, MO 65102
1-888-ASK-MoDOT (1-888-275-6636)

STATE OF MISSOURI
PHILIP R. HARVEY
NUMBER
PE-2001004664
PROFESSIONAL ENGINEER

CHAIN-LINK FENCE

| DATE EFFECTIVE: 02/01/2007 | 607.10V | SHEET NO. |
|---|---|---|
| DATE PREPARED: 8/21/2009 | | 1 OF 1 |

STEVEN R. SCHULTZ
PE-2001004664

| NO. | DATE | REVISIONS | BY | APP'D |
|---|---|---|---|---|
| 1 | | | | |
| 2 | | | | |
| 3 | | | | |
| 4 | | | | |
| 5 | | | | |

Designed By: SRS
Drawn By: CLC
Checked By: SRS
Issue Date: 4.19.2012

COPYRIGHT ©-2011 -SHAFER, KLINE & WARREN INC.
MISSOURI CERTIFICATE OF AUTHORITY: F001398SO

SHAFER, KLINE & WARREN, INC.
3200 Penn Terrace, Suite 100, Columbia, MO 65202-0001
573/442-4537 FAX: 573/442-4543
OFFICE LOCATIONS: Chillicothe, MO Columbia, MO Houston, TX
Iola, KS Kansas City, MO Lenexa, KS
Macon, MO North Kansas City, MO Tulsa, OK
CIVIL ENGINEERS ELECTRICAL ENGINEERS MECHANICAL ENGINEERS STRUCTURAL ENGINEERS LANDSCAPE ARCHITECTS LAND SURVEYORS LAND PLANNERS

IF A SEAL IS PRESENT ON THIS SHEET IT HAS BEEN ELECTRONICALLY SEALED AND DATED.

WAYLAND MoDOT MAINTENANCE FACILITY – WAYLAND, MISSOURI

MISC DETAILS

110172-010

SHEET NO. 9 OF 10

LAYOUT: MISC DET PG9 | BY: JBRYAN | DATE: 4/19/2012
XREF DWG1: NONE | XREF DWG2: NONE
XREF DWG3: NONE | XREF DWG4: NONE
L:\110172-010_CAD\DWG\110172-010 DET PG6-10.DWG

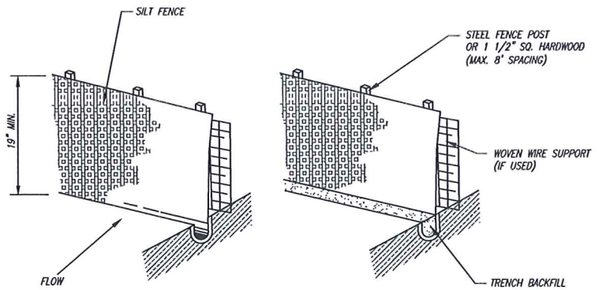


CONSTRUCTION SPECIFICATIONS:

1. POSTS WHICH SUPPORT THE SILT FENCE SHALL BE INSTALLED ON A SLIGHT ANGLE TOWARD THE ANTICIPATED RUNOFF SOURCE AND SPACED AT A MAX. 8' APART OR TO SILT FENCE MANUFACTURER SPECIFICATIONS, WHICHEVER IS STRICTER.
2. SILT FENCE SHALL BE TRENCHED IN WITH A SPADE OR MECHANICAL TRENCHER SO THAT THE DOWNSLOPE FACE OF THE TRENCH IS FLAT AND PERPENDICULAR TO THE LINE OF FLOW.
3. THE TRENCH SHOULD BE A MINIMUM OF 6" DEEP 3-4" WIDE TO ALLOW FOR THE SILT FENCE TO BE LAID IN THE GROUND AND BACKFILLED.
4. SILT FENCE SHOULD BE SECURELY FASTENED TO EACH SUPPORT POST OR TO WOVEN WIRE WHICH IS IN TURN ATTACHED TO THE FENCE POSTS.
5. INSPECTION SHALL BE FREQUENT AND REPAIR OR REPLACEMENT SHALL BE MADE PROMPTLY AS NEEDED.
6. SILT FENCE SHALL BE REMOVED WHEN IT HAS SERVED ITS USEFULNESS SO AS NOT TO BLOCK OR IMPEDE STORM FLOW OR DRAINAGE.
7. SEDIMENT TRAPPED BY THIS PRACTICE SHALL BE UNIFORMLY DISTRIBUTED ON THE SOURCE AREA PRIOR TO TOPSOILING.
8. SILT FENCE SHALL BE MIRAFI-100X FILTER FABRIC OR APPROVED EQUAL.

## SILT FENCE DETAIL
NO SCALE

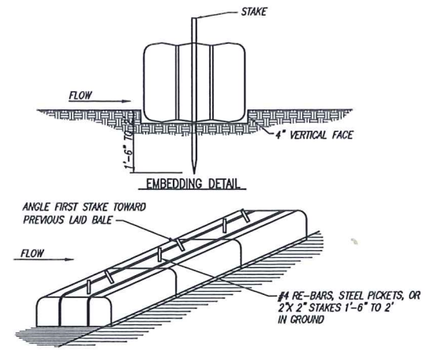


NOTES:

1. BALES SHALL BE PLACED IN A ROW WITH ENDS TIGHTLY ABUTTING THE ADJACENT BALES.
2. EACH BALE SHALL BE EMBEDDED IN THE SOIL A MINIMUM OF 4".
3. BALES SHALL BE SECURELY ANCHORED IN PLACE BY STAKES OR RE-BARS DRIVEN THROUGH THE BALES. THE FIRST STAKE IN EACH BALE SHALL BE ANGLED TOWARD PREVIOUSLY LAID BALE TO FORCE BALES TOGETHER.
4. INSPECTION SHALL BE FREQUENT AND REPAIR OR REPLACEMENT SHALL BE MADE PROMPTLY AS NEEDED.
5. BALES SHALL BE REMOVED WHEN THEY HAVE SERVED THEIR USEFULNESS SO AS NOT TO BLOCK OR IMPEDE STORM FLOW OR DRAINAGE BY THE OWNER.

## STRAW BALE DIKE DETAIL
NO SCALE

NOTES:

1. THE EROSION CONTROL FEATURES AND NOTES SHOWN ON THIS SHEET REPRESENT THE MINIMUM REQUIREMENTS ACCEPTABLE. LOCATIONS ARE TYPICAL AND MAY VARY ACCORDING TO CONTRACTORS STAGING AND LIMITS OF CONSTRUCTION.
2. IT SHALL BE EACH CONTRACTOR'S RESPONSIBILITY TO CONTROL EROSION AND PREVENT POLLUTION FOR ALL WORK WHICH THEY ARE DIRECTLY INVOLVED.
3. IT SHALL BE EACH CONTRACTORS RESPONSIBILITY TO PLACE ADDITIONAL CONTROL DEVICES AS REQUIRED DURING CONSTRUCTION TO PREVENT SOIL LOSS FROM THE SITE. IT SHALL ALSO BE EACH CONTRACTOR'S RESPONSIBILITY TO MAINTAIN THEIR EROSION CONTROL FEATURES IN PROPER WORKING CONDITION UNTIL THE SITE IS STABILIZED BY PAVEMENT, VEGETATION OR OTHER MEANS.
4. WHEN POSSIBLE, WITHOUT ADVERSELY AFFECTING CONSTRUCTION OPERATIONS, THE CONTRACTOR SHALL: MINIMIZE THE AMOUNT OF SURFACE AREA WHICH IS EXPOSED AT ONE TIME, LEAVE GRADED AREAS WITH A ROUGH TEXTURE, CONSTRUCT TEMPORARY TERRACES DURING GRADING OPERATIONS, AND LIMIT UNNECESSARY VEHICLE TRAFFIC IN GRADED AREAS.
5. THE SPILLAGE OF DEBRIS, INCLUDING THE TRACKING OF SOIL, OUTSIDE OF THE CONSTRUCTION LIMITS SHALL BE AVOIDED.
6. STRAW BALE DIKES OR SILT FENCES SHALL BE PLACED ON A CONTOUR ELEVATION ALONG THE DOWNHILL SIDE AND FOR THE FULL EXTENT OF THE DISTURBED AREAS WITHIN THE CONSTRUCTION LIMITS. THE LAST FIVE FEET ON EACH END OF RUN OF SILT FENCE/STRAW BALE DIKE SHALL BE PLACED FACING UPHILL AT 90 DEGREES TO THE CONTOUR LINE.
7. THE CONTRACTOR SHALL PREVENT SILT AND SEDIMENT FROM ENTERING THE STORM SEWER SYSTEM. STRAW BALE DIKES SHALL BE PLACED AROUND ALL STORM SEWER INLETS EXCEPT DURING CONSTRUCTION OPERATIONS WHICH REQUIRE THEIR REMOVAL.
8. CONTRACTOR SHALL INSPECT THEIR EROSION CONTROL DEVICES AFTER ALL RAINFALL EVENTS TO INSURE THEY ARE WORKING PROPERLY. THE CONTRACTOR SHALL ALSO INSPECT THE SITE AFTER ALL RAINFALL EVENTS AND ON A PERIODIC BASIS TO ASSESS THE NEED AND IF PRUDENT, INSTALL ADDITIONAL EROSION CONTROL DEVICES AS REQUIRED.
9. ALL AREAS UPON REACHING FINAL GRADE SHALL BE BROUGHT TO FINAL PLAN CONDITION (PAVED, MULCHED AND SEEDED, SODDED, OR OTHER) AS SOON AS POSSIBLE.

STATE OF MISSOURI
STEVEN R. SCHULTZ
NUMBER PE-2001004664
PROFESSIONAL ENGINEER
4-19-12

STEVEN R. SCHULTZ
PE-2001004664

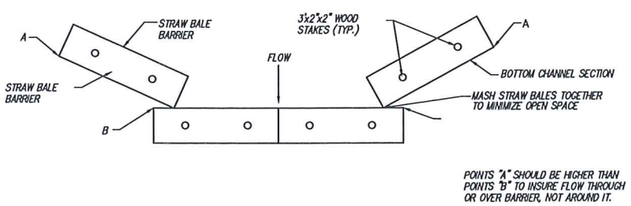


## TOP VIEW DITCH APPLICATION DETAILS

| DITCH CHECK SPACING | | | |
|---|---|---|---|
| DITCH ℄ SLOPE % | SPACING (FT) | DITCH ℄ SLOPE % | SPACING (FT) |
| .05 | 400 | 5.5 | 38 |
| 1.0 | 200 | 6.0 | 35 |
| 1.5 | 133 | 6.5 | 30 |
| 2.0 | 100 | 7.0 | 28 |
| 2.5 | 80 | 7.5 | 26 |
| 3.0 | 66 | 8.0 | 25 |
| 3.5 | 57 | 8.5 | 23 |
| 4.0 | 50 | 9.0 | 22 |
| 4.5 | 44 | 9.5 | 21 |
| 5.0 | 40 | 10.0 | 20 |

## TEMPORARY STRAW BALE DITCH CHECK
NO SCALE

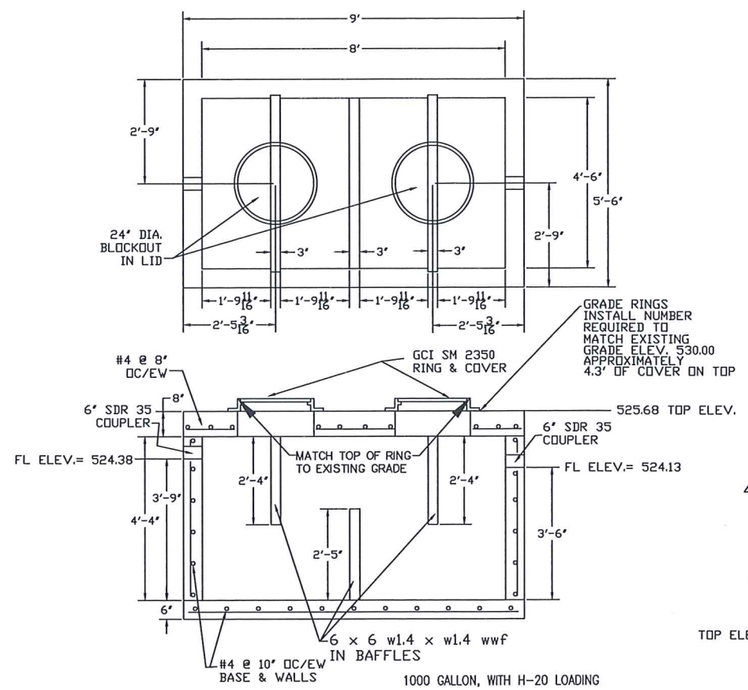


## OIL/WATER SEPARATOR

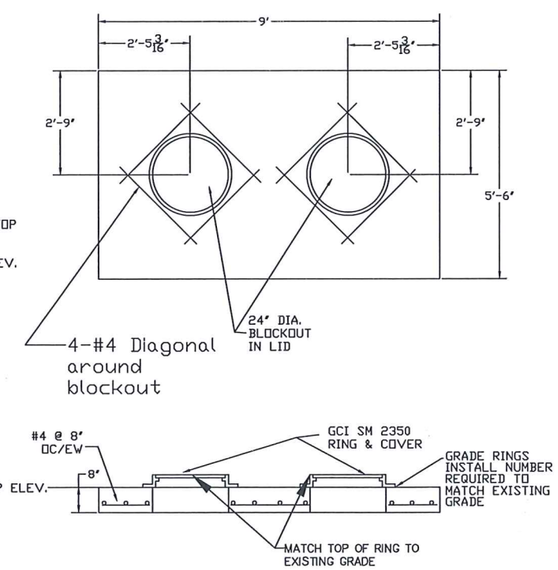


## OIL/WATER SEPARATOR TOP

| NO. | DATE | REVISIONS | BY | APP'D |
|---|---|---|---|---|
| 1 | | | | |
| 2 | | | | |
| 3 | | | | |
| 4 | | | | |
| 5 | | | | |

Designed By: SRS
Drawn By: CLC
Checked By: SRS
Issue Date: 4.19.2012

COPYRIGHT © -2011 -SHAFER, KLINE & WARREN INC.
MISSOURI CERTIFICATE OF AUTHORITY: F001398550

SHAFER, KLINE & WARREN, INC.
3200 Penn Terrace, Suite 100, Columbia, MO 65202-0001
573/442-4537 FAX: 573/442-4543
OFFICE LOCATIONS: Chillicothe, MO Columbia, MO Houston, TX Iola, KS Kansas City, MO Lenexa, KS Macon, MO North Kansas City, MO Tulsa, OK
CIVIL ENGINEERS ELECTRICAL ENGINEERS MECHANICAL ENGINEERS STRUCTURAL ENGINEERS LANDSCAPE ARCHITECTS LAND SURVEYORS LAND PLANNERS

WAYLAND MoDOT MAINTENANCE FACILITY - WAYLAND, MISSOURI

EROSION CONTROL AND OIL/WATER SEPARATOR DETAILS

110172-010

SHEET NO. 10 OF 10

L:\110172-010_CAD\CIVIL\110172-010 DET PG6-10.DWG
LAYOUT: ERO DET PG10 | BY: JBRYAN | DATE: 4/19/2012
XREF DWG1: NONE | XREF DWG2: NONE
XREF DWG3: NONE | XREF DWG4: NONE