MISSOURI HIGHWAYS AND TRANSPORTATION COMMISSION
PLANS FOR ADA COMPLIANT
CURB RAMPS

LAWRENCE COUNTY

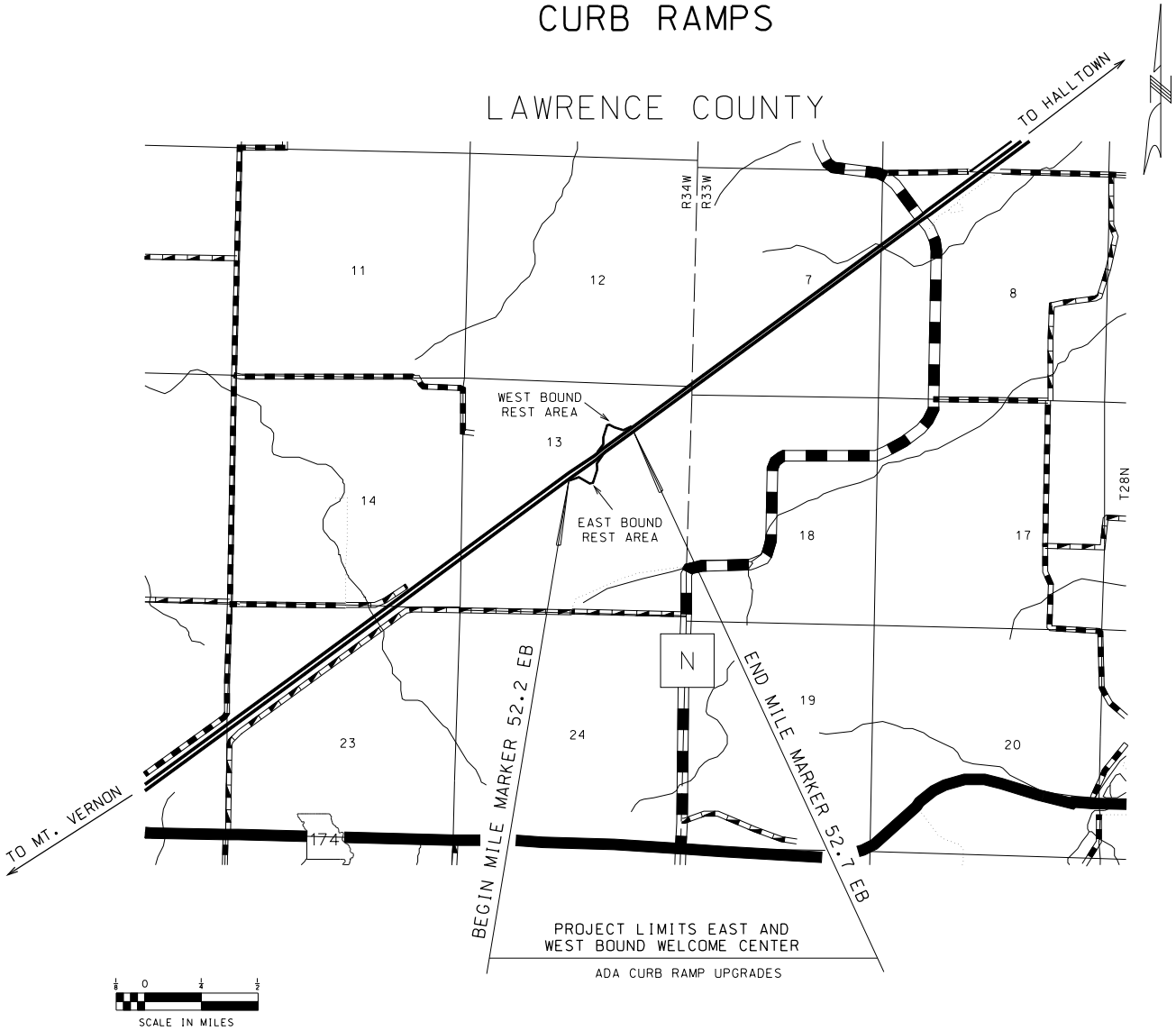

EXHIBIT A
SHEET 1 OF 4

STATE OF MISSOURI
JEROME PAUL DAVIS
NUMBER PE-28271
PROFESSIONAL ENGINEER

THIS SHEET HAS BEEN SIGNED, SEALED AND DATED ELECTRONICALLY.

ROUTE 44	SHEET NO. 1
JOB NO.	DISTRICT 7
COUNTY LAWRENCE	STATE MO
CONTRACT ID. RFB D7-11-033	
PROJECT NO.	
BRIDGE NO.	
DATE PREPARED 2/16/2011	

DATE	DESCRIPTION

MISSOURI HIGHWAYS AND TRANSPORTATION COMMISSION

MoDOT

105 WEST CAPITOL
JEFFERSON CITY, MO 65102
1-888-ASK-MODOT (1-888-275-6636)

IF A SEAL IS PRESENT ON THIS SHEET IT HAS BEEN ELECTRONICALLY SEALED AND DATED.

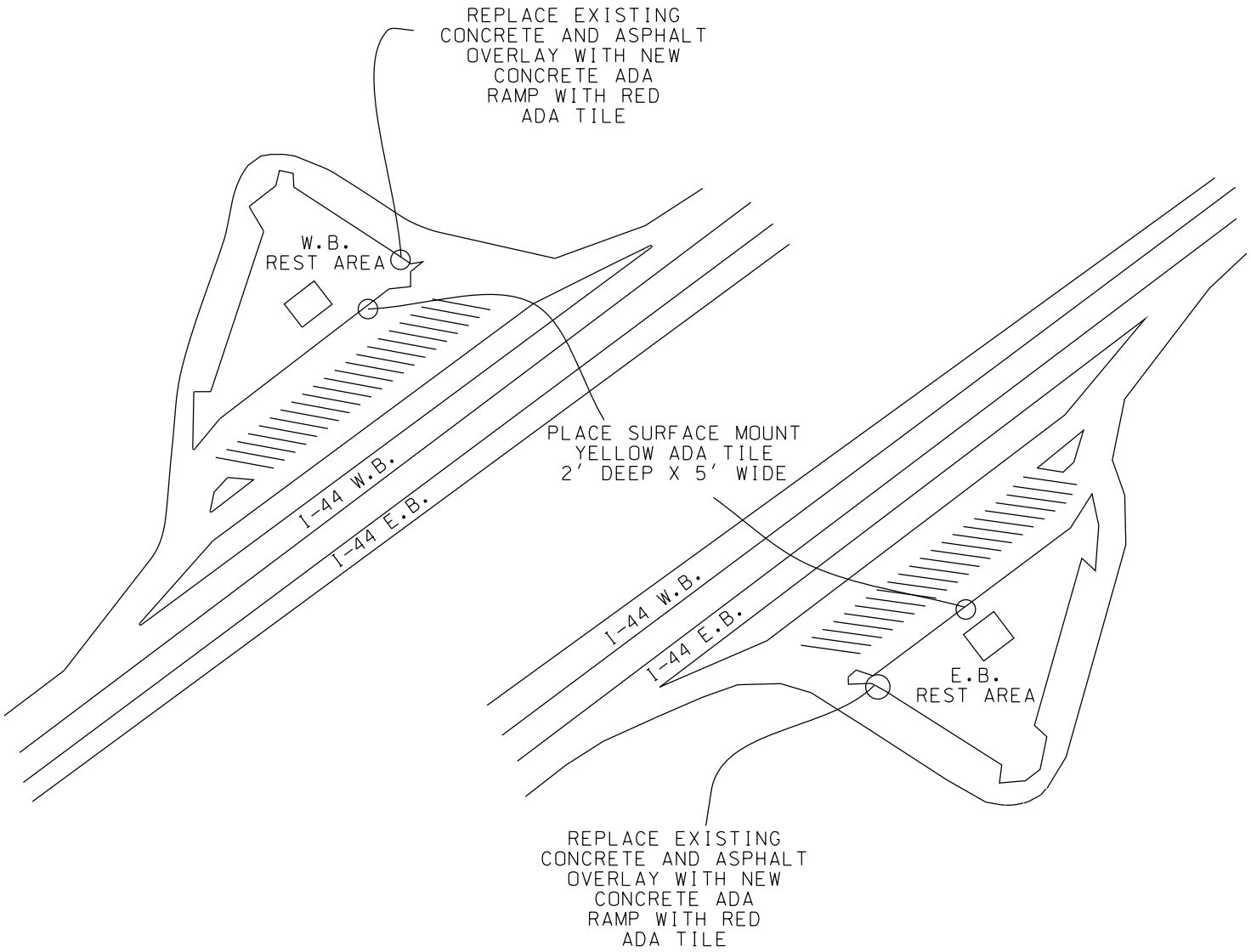

EXHIBIT A
SHEET 2 OF 4

STATE OF MISSOURI
JEROME PAUL DAVIS
NUMBER PE-28271
PROFESSIONAL ENGINEER

THIS SHEET HAS BEEN SIGNED, SEALED AND DATED ELECTRONICALLY.

ROUTE 44	SHEET NO. 2
JOB NO.	DISTRICT 7
COUNTY LAWRENCE	STATE MO
CONTRACT ID. RFB D7-11-033	
PROJECT NO.	
BRIDGE NO.	
DATE PREPARED 2/16/2011	

DATE	DESCRIPTION

MISSOURI HIGHWAYS AND TRANSPORTATION COMMISSION

MoDOT

105 WEST CAPITOL
JEFFERSON CITY, MO 65102
1-888-ASK-MODOT (1-888-275-6636)

IF A SEAL IS PRESENT ON THIS SHEET IT HAS BEEN ELECTRONICALLY SEALED AND DATED.

MISSOURI HIGHWAYS AND TRANSPORTATION COMMISSION

SUMMARY OF QUANTITIES

SUMMARY OF QUANTITIES

QUANTITIES SUMMARIZED IN THESE PLANS ARE FOR THE BIDDERS USE IN GENERATING A BID PRICE FOR THE LUMP SUM, FIRM, FIXED PRICE ITEM INCLUDED ON THE PRICING SHEET IN THE REQUEST FOR BID DOCUMENTS:

THE COMMISSION MAKES NO GUARANTEE THE QUANTITY SUMMARY PROVIDED IS CORRECT OR USABLE FOR THE ASSEMBLY OF A BID BY THE BIDDER. THE BIDDER SHALL PROVIDE MORE OR LESS OF THE QUANTITIES TO COMPLETE THE WORK. ERRORS AND OMISSIONS IN THESE QUANTITIES SHALL NOT BE USED AS A BASIS FOR ADJUSTMENT OF THE FIRM, FIXED PRICE BID FROM THE CONTRACTOR AFTER AWARD.

THE BIDDER IS ADVISED TO REVIEW THE PLANS AND FIELD CONDITIONS IN PREPARING AN ACCURATE BID.

PEDESTRIAN TRAFFIC CONTROL

WORKING AREAS SHALL BE GUARDED FROM PEDESTRIAN ACCESS BY BARRICADE FENCING 36 TO 48 INCHES IN HEIGHT WITH A GAP NO GREATER THAN 6 INCHES FROM THE GROUND AND HOLES NO GREATER THAN 4 INCHES IN ANY DIMENSION.

PEDESTRIAN ACCESS ON SIDEWALK SHALL BE PROVIDED WITH A WIDTH NOT LESS THAN 4 FEET OF SMOOTH STABLE SURFACING ADJACENT TO BARRICADE FENCING FOR ACCESS TO THE MAIN BUILDING.

SIDEWALK RAMP CLOSURES FOR RECONSTRUCTION SHALL BE PERFORMED WITH DIRECTIONAL INDICATOR BARRICADES. TWO BARRICADES PER PEDESTRIAN APPROACH. ONE SIDEWALK CLOSED SIGN (R9-9) WILL BE PLACED UPON ONE BARRICADE FOR EACH APPROACH. NO MORE THAN ONE 5 FOOT SECTION OF SIDEWALK RAMP SHALL BE CLOSED LEADING TO THE MAIN BUILDING AT ANY TIME ADJACENT TO THE WORK AREA.

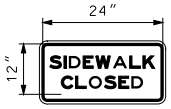

R9-9

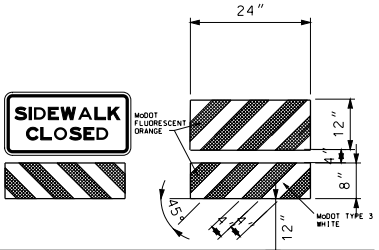

DIRECTION INDICATOR BARRICADE

VERTICAL DIMENSIONS DO NOT INCLUDE PROJECTIONS DESIGNED FOR EASE OF HANDLING.

THE PANELS SHALL BE SECURELY ATTACHED TO A SUPPORT THAT IS PORTABLE, CAPABLE OF REMAINING UPRIGHT AND ENTIRELY FREE STANDING.

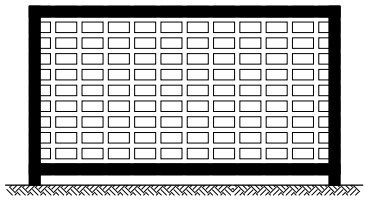

PLASTIC SAFETY NETTING USED FOR BARRICADE FENCING SHALL BE SUPPORTED WITH RIGID SUPPORTS ON ALL SIDES TO PREVENT SAGGING OF THE MATERIAL. ADEQUATE FOUNDATIONS AND BALLAST SHALL BE PROVIDED TO KEEP THE BARRICADE FENCE UPRIGHT AND FREE STANDING

SUMMARY OF QUANTITY

DESCRIPTION	QUANTITY	UNITS	COMMENTS
SIDEWALK REMOVAL	258	SQ FT	QTY FOR BOTH EAST AND WEST BOUND
COMPACTING SUBGRADE	258	SQ FT	QTY FOR BOTH EAST AND WEST BOUND
NEW ADA RAMP AND 4 INCH SIDEWALK	258	LN FT	QTY FOR BOTH EAST AND WEST BOUND
NEW 6 INCH SEPARATED CURB	22	LN FT	QTY FOR BOTH EAST AND WEST BOUND
1/2 INCH FIBER JOINT AND SEAL	31	SQ FT	QTY FOR BOTH EAST AND WEST BOUND
SURFACE MT YELLOW ADA TILE	32	SQ FT	QTY FOR BOTH EAST AND WEST BOUND
RED ADA TILE	20	SQ FT	QTY FOR BOTH EAST AND WEST BOUND

UTILITIES

UTILITY FACILITIES INCLUDING TELEPHONE, WATER, SANITARY, AND ELECTRICITY LOCATED ON THE GROUNDS ARE NOT REPRESENTED ON THESE PLANS. THE USERS OF THESE PLANS ARE ADVISED TO PROCEED WITH CAUTION. DAMAGES ARISING FROM CONFLICT WITH UTILITY FACILITIES SHALL BE THE SOLE RESPONSIBILITY OF THE CONTRACTOR OR USERS OF THESE PLANS. THE COMMISSION SHALL NOT BE HELD LIABLE FOR ANY DAMAGES WHICH MAY ARISE FROM THE CONTRACTORS OR USERS WORK WITH THESE PLANS.

EXHIBIT A
SHEET 3 OF 4

STATE OF MISSOURI
JEROME PAUL DAVIS
NUMBER PE-28271
PROFESSIONAL ENGINEER

THIS SHEET HAS BEEN SIGNED, SEALED AND DATED ELECTRONICALLY.

ROUTE 44		SHEET NO.	3
JOB NO.		DISTRICT	7
COUNTY LAWRENCE		STATE	MO
CONTRACT ID.	RFB D7-11-033		
PROJECT NO.			
BRIDGE NO.			
DATE PREPARED	2/16/2011		

DATE	DESCRIPTION

MISSOURI HIGHWAYS AND TRANSPORTATION COMMISSION

MoDOT

105 WEST CAPITOL
JEFFERSON CITY, MO 65102
1-888-ASK-MODOT (1-888-275-6636)

IF A SEAL IS PRESENT ON THIS SHEET IT HAS BEEN ELECTRONICALLY SEALED AND DATED.

REV.

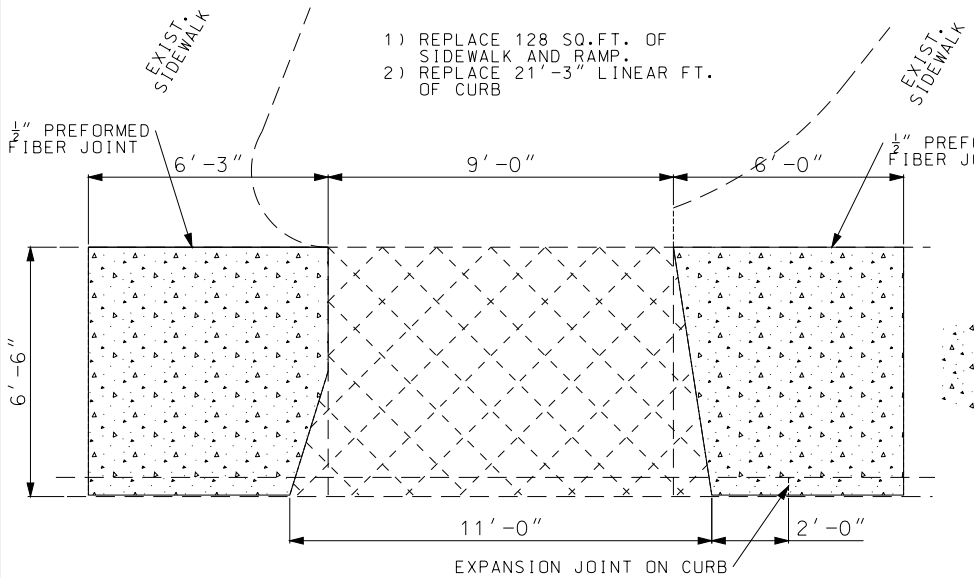

WEST BOUND RAMP AND SIDEWALK REPLACEMENT

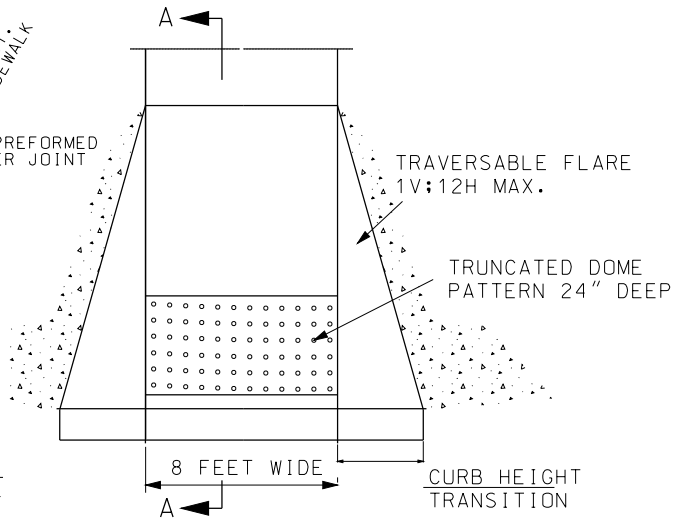

PERPENDICULAR CONCRETE CURB RAMP

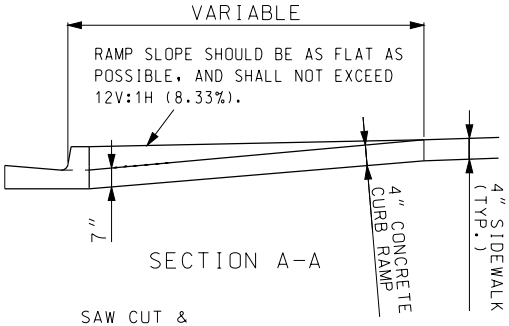

SECTION A-A

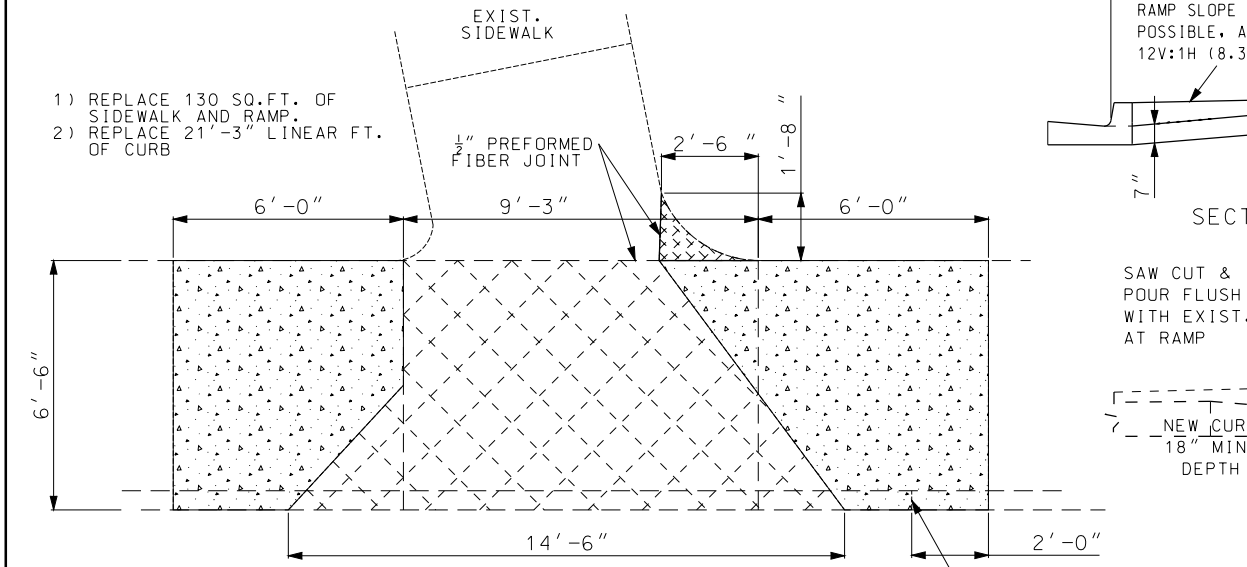

EAST BOUND RAMP AND SIDEWALK REPLACEMENT

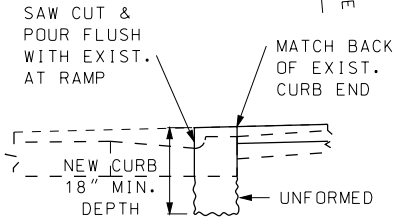

EXHIBIT A
SHEET 4 OF 4

STATE OF MISSOURI
JEROME PAUL DAVIS
NUMBER PE-28271
PROFESSIONAL ENGINEER

THIS SHEET HAS BEEN SIGNED, SEALED AND DATED ELECTRONICALLY.

ROUTE	44	SHEET NO.	4
JOB NO.		DISTRICT	7
COUNTY	LAWRENCE	STATE	MO
CONTRACT ID.	RFB D7-11-033		
PROJECT NO.			
BRIDGE NO.			
DATE PREPARED	2/16/2011		

DATE	DESCRIPTION

MISSOURI HIGHWAYS AND TRANSPORTATION COMMISSION

MoDOT

105 WEST CAPITOL
JEFFERSON CITY, MO 65102
1-888-ASK-MODOT (1-888-275-6636)

IF A SEAL IS PRESENT ON THIS SHEET IT HAS BEEN ELECTRONICALLY SEALED AND DATED.