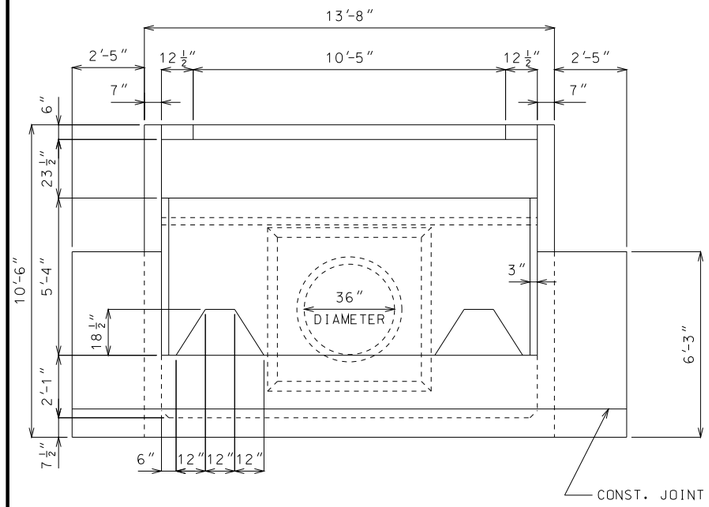

DOWNSTREAM ELEVATION

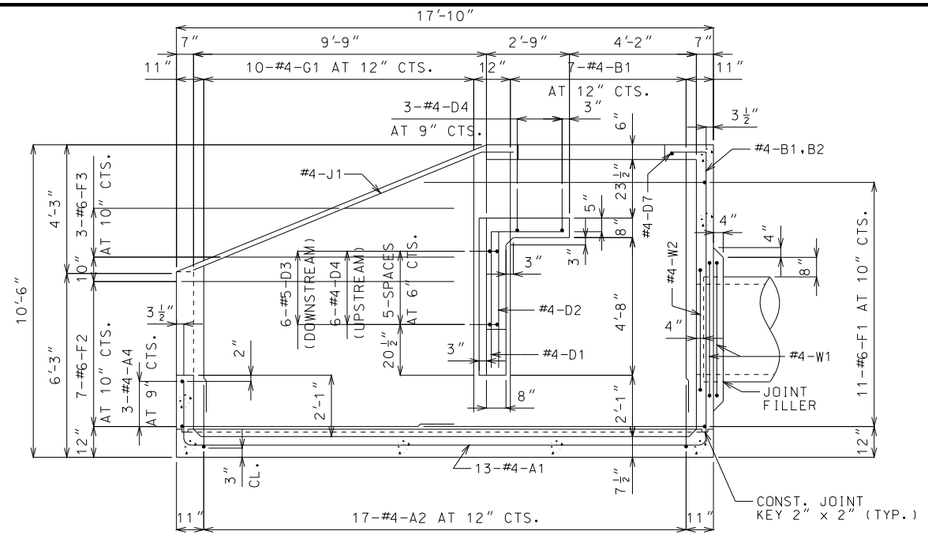

SECTION A - A

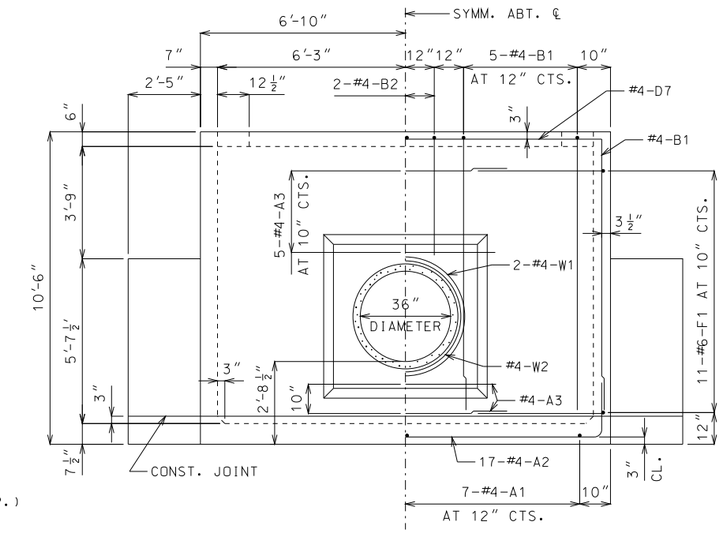

UPSTREAM ELEVATION

NOTE: BEND OR CUT A1 BARS IN FIELD TO CLEAR PIPE.

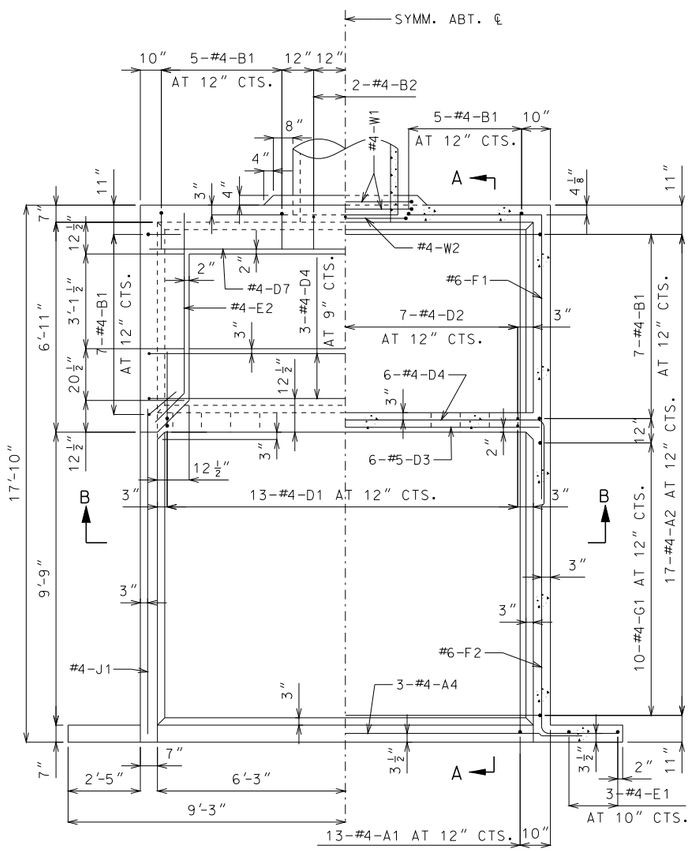

HALF PLAN HALF HORIZONTAL SECTION

GENERAL NOTES:

DESIGN UNIT STRESSES

CLASS B CONCRETE f'c = 3,000 psi
REINFORCING STEEL (GRADE 60) fy = 60,000 psi

REINFORCING STEEL

MINIMUM CLEARANCE TO REINFORCING STEEL SHALL BE 1½" UNLESS SHOWN OTHERWISE.

DIMENSIONS

DRAWINGS ARE NOT TO SCALE. FOLLOW DIMENSIONS.

ESTIMATED QUANTITIES		
ITEM		TOTAL
CLASS B CONCRETE	CU. YD.	19.0
REINFORCING STEEL	LBS.	1,870

COMPLETE BILL OF REINFORCING STEEL														
NO. REQ'D	MARK NO. (SIZE MARK)	SHAPE NO.	VARIES (V)	EACH NO.	DIMENSIONS B	C	D	E	F	H	K	NOMINAL LENGTH	ACTUAL LENGTH	WEIGHT
					FT. IN.	FT. IN.	FT. IN.	FT. IN.	FT. IN.	FT. IN.	FT. IN.	FT. IN.	FT. IN.	LBS.
13	4 A1	11				2-2½	17-5½	2-4				22-0	21-10	190
17	4 A2	11				2-4	13-1	2-4				17-9	17-7	200
7	4 A3	20			5-11							5-11	5-11	28
3	4 A4	20			15-2							15-2	15-2	30
24	4 B1	19			8-7½	0-15						9-11	9-9	156
3	4 B2	19			4-2½	0-15						5-6	5-4	11
13	4 D1	19			4-11	2-5½						7-5	7-3	63
13	4 D2	20			4-11							4-11	4-11	43
6	5 D3	20			13-5							13-5	13-5	84
9	4 D4	11				0-12	13-2	0-12				15-2	15-0	90
4	4 D5	14			0-12	0-8¾	3-0			2-6	0-20	4-9	4-7	12
2	4 D6	15			3-0	5-4½	3-0	2-6	0-20	2-6	0-20	11-5	11-4	15
1	4 D7	20			13-5							13-5	13-5	9
6	4 E1	20			6-0							6-0	6-0	24
2	4 E2	15			0-22⅝	6-0				0-16	0-16	7-11	7-10	10
2	4 E3	20			3-7							3-7	3-7	5
22	6 F1	19			9-10½	4-7½						14-6	14-4	474
14	6 F2	19			9-2½	2-6½						11-9	11-7	244
6	6 F3	20	V	2	3-6							3-6	3-6	
					7-6	(INCREMENT = 24 INCHES)						7-6	7-6	50
20	4 G1	20	V	2	4-9							4-9	4-9	
					8-5½	(INCREMENT = 5 INCHES)						8-6	8-6	89
2	4 J1	20			12-0							12-0	12-0	16
2	4 W1	16			4-0½							13-7	13-7	18
1	4 W2	16			3-4½							11-6	11-6	8

BENDING DIAGRAMS

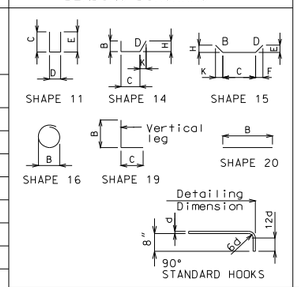

ALL STANDARD HOOKS AND BENDS OTHER THAN 180 DEG. TO BE BENT WITH SAME PROCEDURE AS FOR 90 DEG. STANDARD HOOKS.

HOOKS AND BENDS SHALL BE IN ACCORDANCE WITH THE PROCEDURES AS SHOWN ON THIS SHEET.

NOMINAL LENGTHS ARE BASED ON OUT TO OUT DIMENSIONS SHOWN IN BENDING DIAGRAMS AND ARE LISTED FOR FABRICATORS USE.

PAYWEIGHTS ARE BASED ON ACTUAL LENGTHS.

LENGTH = TOTAL LENGTHS ARE MEASURED ALONG CENTERLINE BAR TO THE NEAREST INCH.

V - BAR DIMENSIONS VARY IN EQUAL INCREMENTS BETWEEN DIMENSIONS SHOWN ON THIS LINE AND THE FOLLOWING LINE.

NO.EA. = NUMBER OF BARS OF EACH LENGTH.

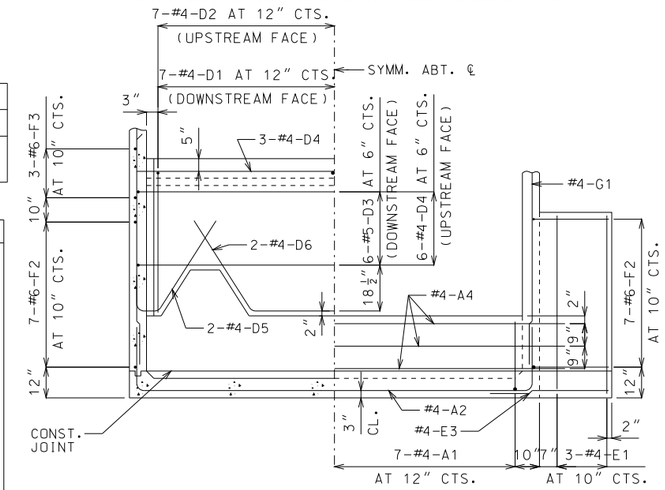

HALF SECTION B-B HALF ELEVATION OF LOWER BAFFLE AND WING

NOTE: BEND OR CUT D1 AND D2 BARS IN FIELD TO CLEAR NOTCH IN BAFFLE WALL.

IF A SEAL IS PRESENT ON THIS SHEET IT HAS BEEN ELECTRONICALLY SEALED AND DATED.

MISSOURI HIGHWAYS AND TRANSPORTATION COMMISSION
105 WEST CAPITOL
JEFFERSON CITY, MO 65102
1-888-ASK-MODOT (1-888-275-6636)

STATE OF MISSOURI
DENNIS W. HECKMAN
NUMBER PE-27141
PROFESSIONAL ENGINEER
THIS SHEET HAS BEEN SIGNED, SEALED AND DATED ELECTRONICALLY.

PIPE CULVERT HEADWALL

ENERGY DISSIPATOR (IMPACT TYPE) FOR 36" CONCRETE PIPE

DATE EFFECTIVE: 07/01/2001
DATE PREPARED: 9/3/2009

604.13E

SHEET NO. 1 OF 1