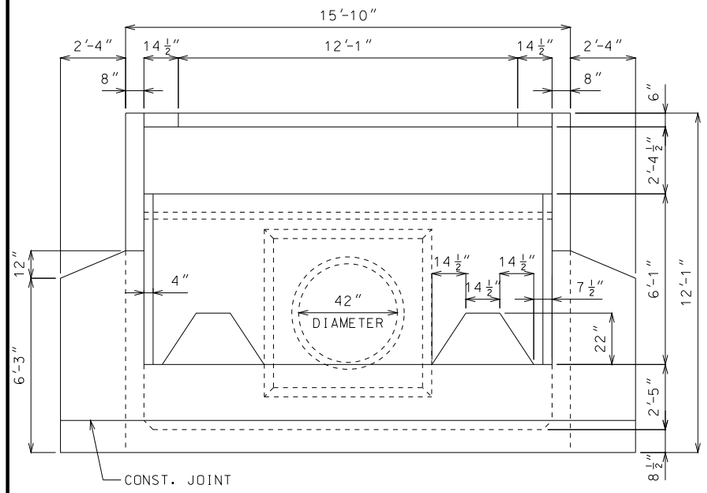

DOWNSTREAM ELEVATION

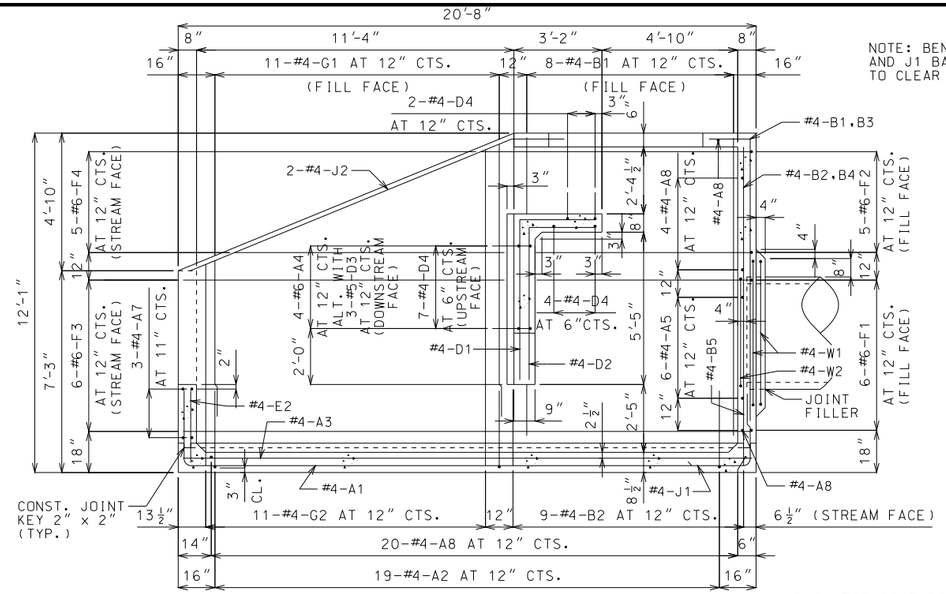

SECTION A - A

NOTE: BEND OR CUT A1 AND J1 BARS IN FIELD TO CLEAR PIPE.

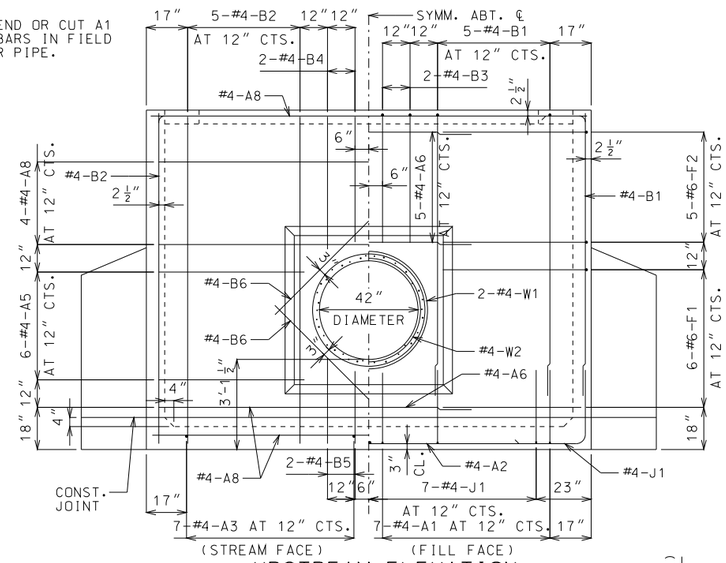

UPSTREAM ELEVATION

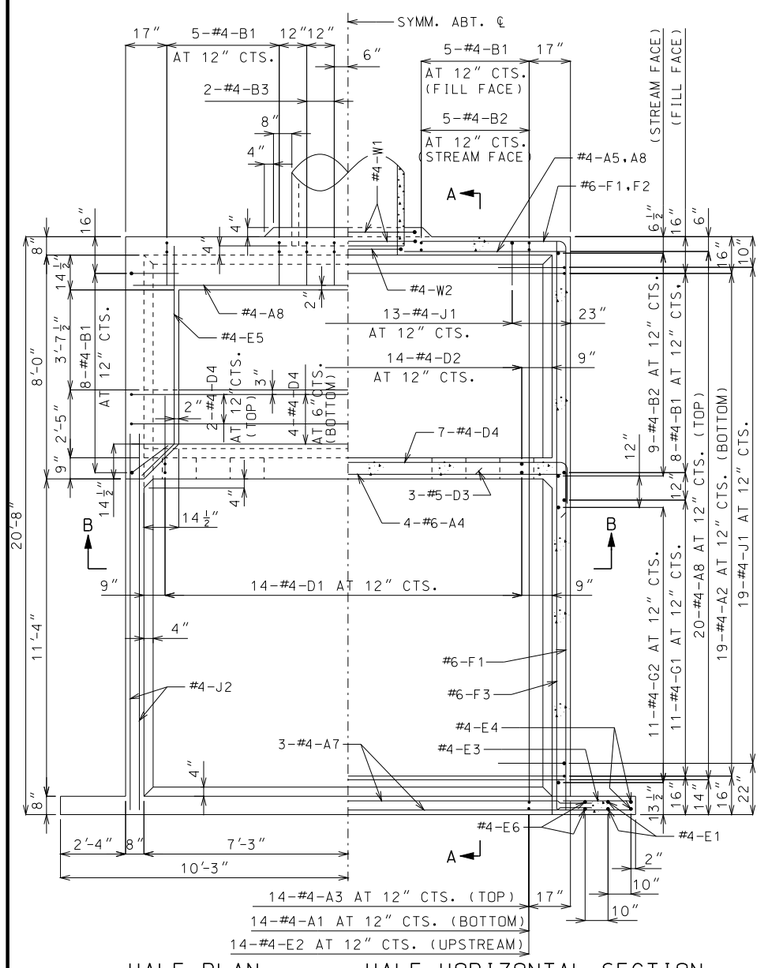

HALF PLAN HALF HORIZONTAL SECTION

COMPLETE BILL OF REINFORCING STEEL															
NO. REQ'D	MARK NO. SIZE	MARK NO. MARK	SHAPE NO.	VARIES (V)	NO. EACH	DIMENSIONS B	C	D	E	F	H	K	NOMINAL LENGTH	ACTUAL LENGTH	WEIGHT
						FT. IN.	FT. IN.	FT. IN.	FT. IN.	FT. IN.	FT. IN.	FT. IN.	FT. IN.	FT. IN.	LBS.
14	4	A1	11				2-9	20-4	2-9				25-10	25-8	240
19	4	A2	11				2-10	15-7	2-10				21-3	21-1	268
14	4	A3	20			20-4							20-4	20-4	190
4	6	A4	20			15-7							15-7	15-7	94
12	4	A5	20			5-7							5-7	5-7	45
6	4	A6	20			6-5							6-5	6-5	26
6	4	A7	20			16-9							16-9	16-9	67
26	4	A8	20			15-7							15-7	15-7	271
26	4	B1	19			9-11 1/2	0-19						11-7	11-5	198
28	4	B2	20			11-10							11-10	11-10	221
4	4	B3	19			4-10	0-19						6-5	6-4	17
4	4	B4	20			4-10							4-10	4-10	13
4	4	B5	20			2-6							2-6	2-6	7
4	4	B6	20			5-0							5-0	5-0	13
14	4	D1	19			5-9 1/2	2-10 1/2						8-8	8-7	80
14	4	D2	19			5-5 1/2	2-6						8-0	7-10	73
3	5	D3	20			10-0							10-0	10-0	31
13	4	D4	11				0-12	15-7	0-12				17-7	17-5	151
2	4	D5	15			3-7 5/8	5-10	3-7 5/8	3-0 1/2	2-0	3-0 1/2	2-0	13-1	13-0	17
4	4	D6	14			0-12	0-13 1/2	3-7 5/8			3-0 1/2	2-0	5-9	5-7	15
4	4	E1	20			6-5							6-5	6-5	17
14	4	E2	20			2-10							2-10	2-10	26
12	4	E3	20			2-9							2-9	2-9	22
4	4	E4	25			6-0	2-5	0-6 1/2			0-11 1/2	2-2 1/2	8-11	8-10	24
2	4	E5	15			2-2 7/8	7-3 1/2				0-19	0-19	9-6	9-6	13
4	4	E6	20			6-9							6-9	6-9	18
12	6	F1	19			20-5	5-5 1/2						25-11	25-9	464
10	6	F2	19	V	2	9-8	5-5 1/2						15-2	15-0	
						19-6	5-5 1/2	(INCREMENT = 29 1/2)					25-0	24-10	299
12	6	F3	19			20-5	2-9						23-2	23-0	415
10	6	F4	20	V	2	9-8							9-8	9-8	
						19-6		(INCREMENT = 29 1/2)					19-6	19-6	219
22	4	G1	20	V	2	5-7							5-7	5-7	
						9-6		(INCREMENT = 4 3/4)					9-6	9-6	111
22	4	G2	20	V	2	7-7							7-7	7-7	
						11-6		(INCREMENT = 4 3/4)					11-6	11-6	140
51	4	J1	19			3-3	3-3						6-6	6-5	219
4	4	J2	20			13-10							13-10	13-10	37
2	4	W1	16			4-7 1/2							15-5	15-5	21
1	4	W2	16			3-10 1/2							13-1	13-1	9

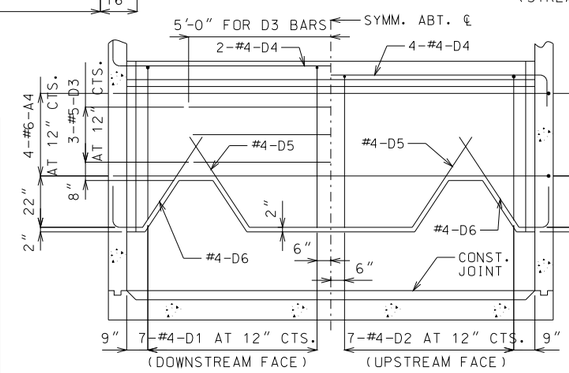

SECTION B-B

NOTE: BEND OR CUT D1 AND D2 BARS IN FIELD TO CLEAR NOTCH IN BAFFLE WALL.

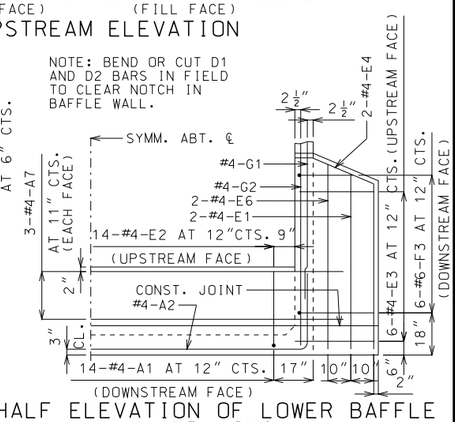

HALF ELEVATION OF LOWER BAFFLE AND WING

ESTIMATED QUANTITIES		
ITEM		TOTAL
CLASS B CONCRETE	CU. YD.	28.2
REINFORCING STEEL	LBS.	4,090

BENDING DIAGRAMS

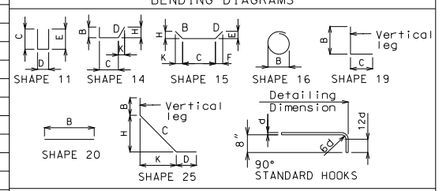

ALL STANDARD HOOKS AND BENDS OTHER THAN 180 DEG. TO BE BENT WITH SAME PROCEDURE AS FOR 90 DEG. STANDARD HOOKS.

HOOKS AND BENDS SHALL BE IN ACCORDANCE WITH THE PROCEDURES AS SHOWN ON THIS SHEET.

NOMINAL LENGTHS ARE BASED ON OUT TO OUT DIMENSIONS SHOWN IN BENDING DIAGRAMS AND ARE LISTED FOR FABRICATORS USE.

PAYWEIGHTS ARE BASED ON ACTUAL LENGTHS.

LENGTH = TOTAL LENGTHS ARE MEASURED ALONG CENTERLINE BAR TO THE NEAREST INCH.

V - BAR DIMENSIONS VARY IN EQUAL INCREMENTS BETWEEN DIMENSIONS SHOWN ON THIS LINE AND THE FOLLOWING LINE.

NO.EA. = NUMBER OF BARS OF EACH LENGTH.

GENERAL NOTES:

DESIGN UNIT STRESSES

CLASS B CONCRETE f'c = 3,000 psi
REINFORCING STEEL (GRADE 60) fy = 60,000 psi

REINFORCING STEEL

MINIMUM CLEARANCE TO REINFORCING STEEL

DIMENSIONS

DRAWINGS ARE NOT TO SCALE. FOLLOW DIMENSIONS.

MISSOURI HIGHWAYS AND TRANSPORTATION COMMISSION
105 WEST CAPITOL
JEFFERSON CITY, MO 65102
1-888-ASK-MODOT (1-888-275-6636)

STATE OF MISSOURI
DENNIS W. HECKMAN
NUMBER PE-27141
PROFESSIONAL ENGINEER
THIS SHEET HAS BEEN SIGNED, SEALED AND DATED ELECTRONICALLY.

PIPE CULVERT HEADWALL

ENERGY DISSIPATOR (IMPACT TYPE) FOR 42" CONCRETE PIPE

DATE EFFECTIVE: 07/01/2001
DATE PREPARED: 9/3/2009

604.14E

SHEET NO. 1 OF 1

IF A SEAL IS PRESENT ON THIS SHEET IT HAS BEEN ELECTRONICALLY SEALED AND DATED.