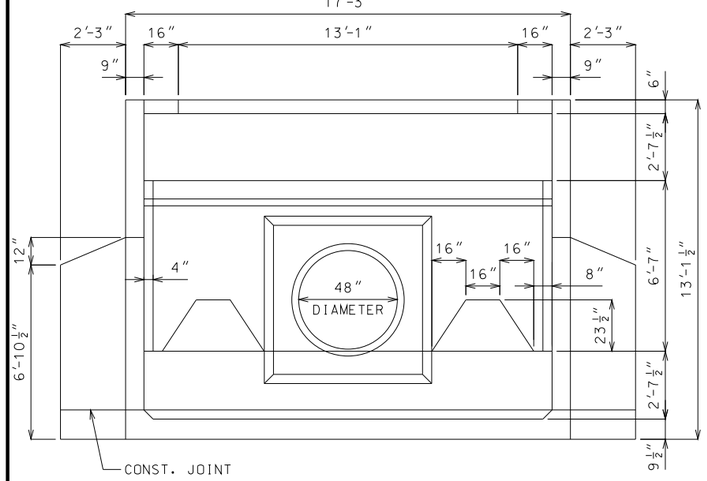

DOWNSTREAM ELEVATION

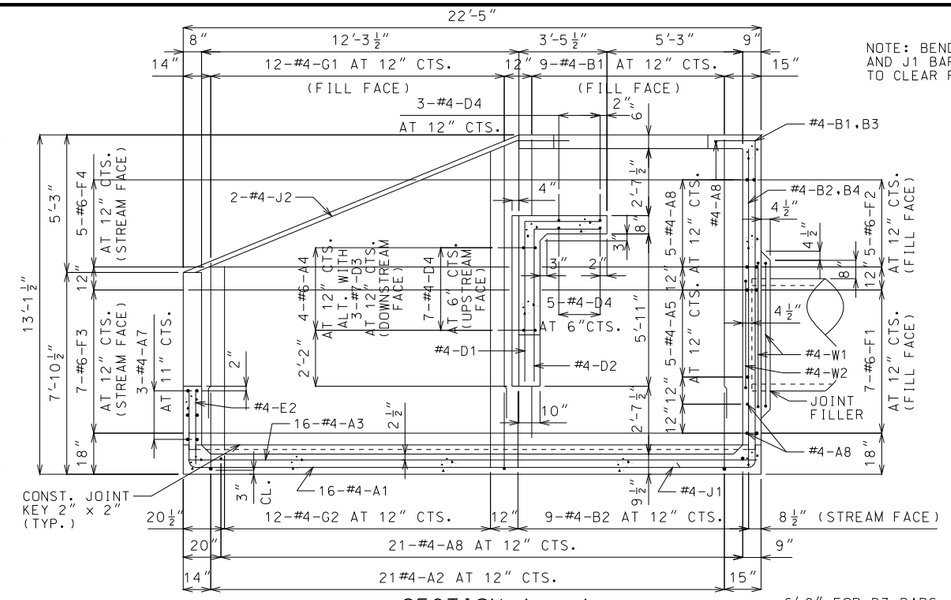

SECTION A - A

NOTE: BEND OR CUT A1 AND J1 BARS IN FIELD TO CLEAR PIPE.

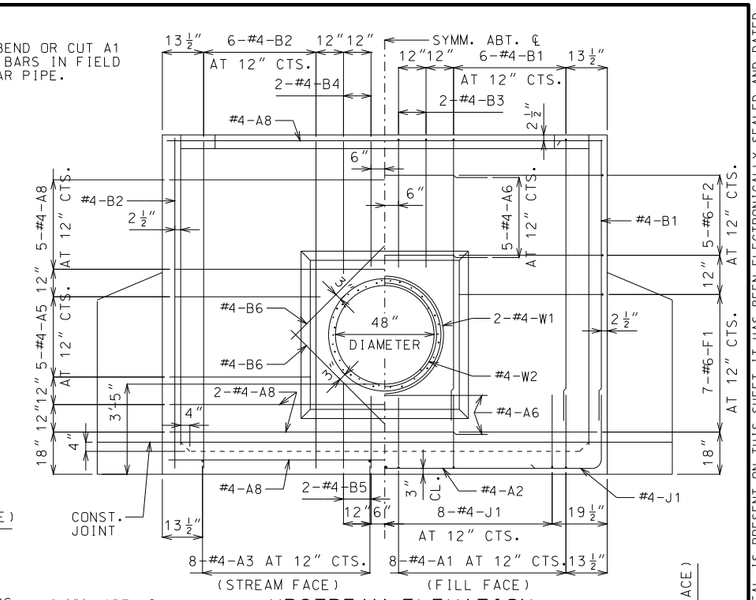

UPSTREAM ELEVATION

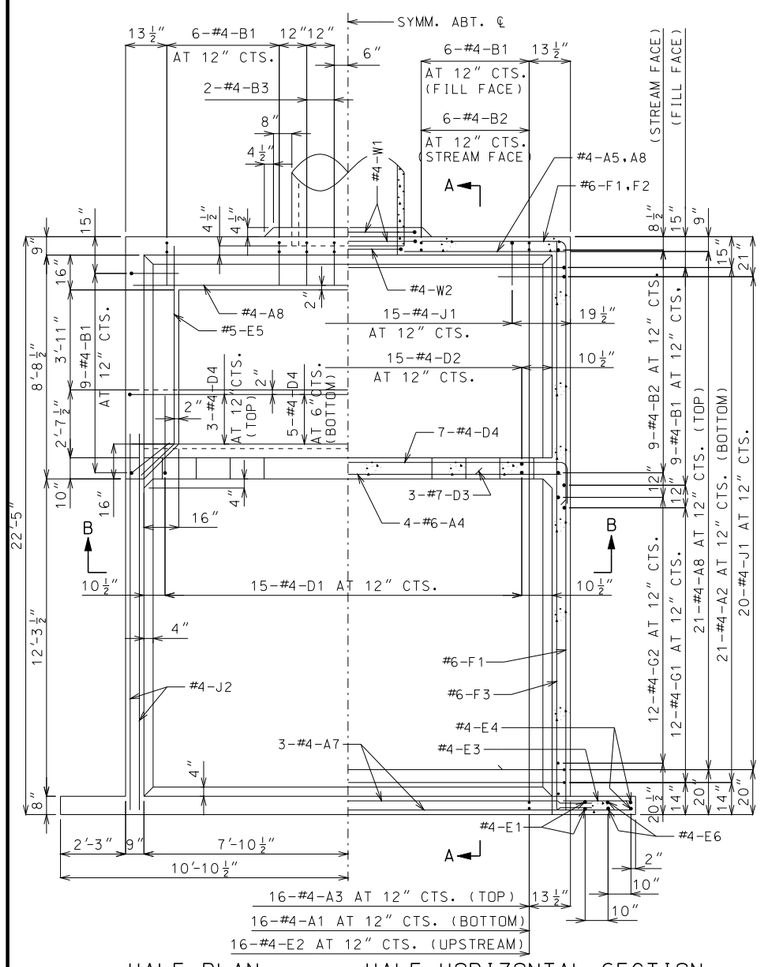

HALF PLAN HALF HORIZONTAL SECTION

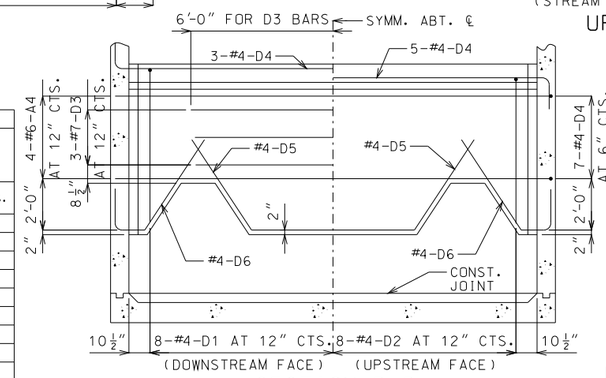

SECTION B-B

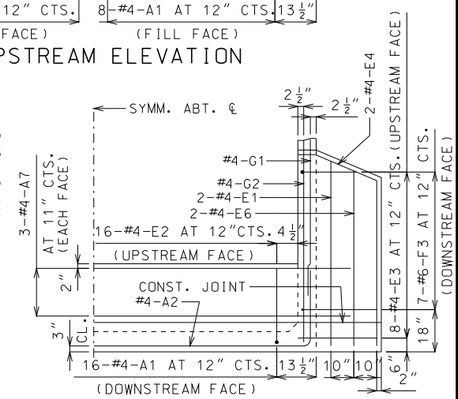

HALF ELEVATION OF LOWER BAFFLE AND WING

COMPLETE BILL OF REINFORCING STEEL

NO. REQ'D	MARK NO. SIZE	MARK NO. MARK	SHAPE NO.	VARIES (V)	NO. EACH	DIMENSIONS B FT. IN.	C FT. IN.	D FT. IN.	E FT. IN.	F FT. IN.	H FT. IN.	K FT. IN.	NOMINAL LENGTH FT. IN.	ACTUAL LENGTH FT. IN.	WEIGHT LBS.
16	4	A1	11				3-0½	22-1	3-0½				28-2	28-0	299
21	4	A2	11				3-1	16-11	3-1				23-1	22-11	321
16	4	A3	20			22-2							22-2	22-2	237
4	6	A4	20			17-0							17-0	17-0	102
10	4	A5	20			6-0							6-0	6-0	40
7	4	A6	20			7-1							7-1	7-1	33
6	4	A7	20			18-0							18-0	18-0	72
29	4	A8	20			17-0							17-0	17-0	329
30	4	B1	19			10-8½	0-21½						12-6	12-5	249
30	4	B2	20			12-10½							12-11	12-11	259
4	4	B3	19			5-0½	0-21½						6-10	6-9	18
4	4	B4	20			5-1							5-1	5-1	14
4	4	B5	20			2-10							2-10	2-10	8
4	4	B6	20			5-1							5-1	5-1	14
15	4	D1	19			6-3½	3-2½						9-6	9-5	94
15	4	D2	19			5-11	2-8						8-7	8-6	85
3	7	D3	20			12-0							12-0	12-0	74
15	4	D4	11				0-12	17-0	0-12				19-0	18-10	189
2	4	D5	15			3-9⅞	6-4	3-9⅞	3-1¾	2-2	3-1¾	2-2	14-0	13-11	19
4	4	D6	14			0-12	0-15	3-9⅞			3-1¾	2-2	6-1	5-11	16
4	4	E1	20			7-5							7-5	7-5	20
16	4	E2	20			3-2							3-2	3-2	34
16	4	E3	20			2-9							2-9	2-9	29
4	4	E4	25			6-8	2-2⅞	0-7½			0-10	2-1	9-6	9-6	25
2	5	E5	15			2-7⅛	7-11½				0-22	0-22	10-7	10-6	22
4	4	E6	20			7-1							7-1	7-1	19
14	6	F1	19			22-3	6-0						28-3	28-1	591
10	6	F2	19	V	2	10-8½	6-0						16-9	16-7	
						20-6½	6-0	(INCREMENT = 29½)					26-7	26-5	323
14	6	F3	19			22-3	2-9						25-0	24-10	522
10	6	F4	20	V	2	10-8½							10-9	10-7	
						20-6½		(INCREMENT = 29½)					20-7	20-7	233
24	4	G1	20	V	2	8-1							8-1	8-1	
						12-6½		(INCREMENT = 4⅞)					12-7	12-7	166
24	4	G2	20	V	2	8-4							8-4	8-4	
						12-9½		(INCREMENT = 4⅞)					12-10	12-10	170
55	4	J1	19			3-3	3-3						6-6	6-5	236
4	4	J2	20			14-10							14-10	14-10	40
2	4	W1	16			5-2½							17-3	17-3	23
1	4	W2	16			4-4½							14-7	14-7	10

ESTIMATED QUANTITIES

ITEM		TOTAL
CLASS B CONCRETE	CU. YD.	36.7
REINFORCING STEEL	LBS.	4,940

BENDING DIAGRAMS

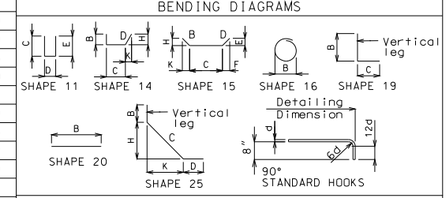

ALL STANDARD HOOKS AND BENDS OTHER THAN 180 DEG. TO BE BENT WITH SAME PROCEDURE AS FOR 90 DEG. STANDARD HOOKS.

HOOKS AND BENDS SHALL BE IN ACCORDANCE WITH THE PROCEDURES AS SHOWN ON THIS SHEET.

NOMINAL LENGTHS ARE BASED ON OUT TO OUT DIMENSIONS SHOWN IN BENDING DIAGRAMS AND ARE LISTED FOR FABRICATORS USE.

PAYWEIGHTS ARE BASED ON ACTUAL LENGTHS.

LENGTH = TOTAL LENGTHS ARE MEASURED ALONG CENTERLINE BAR TO THE NEAREST INCH.

V - BAR DIMENSIONS VARY IN EQUAL INCREMENTS BETWEEN DIMENSIONS SHOWN ON THIS LINE AND THE FOLLOWING LINE.

NO.EA. = NUMBER OF BARS OF EACH LENGTH.

GENERAL NOTES:

DESIGN UNIT STRESSES

CLASS B CONCRETE f'c = 3,000 psi
REINFORCING STEEL (GRADE 60) fy = 60,000 psi

REINFORCING STEEL

MINIMUM CLEARANCE TO REINFORCING STEEL SHALL BE 1½" UNLESS SHOWN OTHERWISE.

DIMENSIONS

DRAWINGS ARE NOT TO SCALE. FOLLOW DIMENSIONS.

IF A SEAL IS PRESENT ON THIS SHEET IT HAS BEEN ELECTRONICALLY SEALED AND DATED.

MISSOURI HIGHWAYS AND TRANSPORTATION COMMISSION
105 WEST CAPITOL
JEFFERSON CITY, MO 65102
1-888-ASK-MODOT (1-888-275-6636)

STATE OF MISSOURI
DENNIS W. HECKMAN
NUMBER PE-27141
PROFESSIONAL ENGINEER
THIS SHEET HAS BEEN SIGNED, SEALED AND DATED ELECTRONICALLY.

PIPE CULVERT HEADWALL
ENERGY DISSIPATOR (IMPACT TYPE) FOR 48" CONCRETE PIPE

DATE EFFECTIVE: 07/01/2001
DATE PREPARED: 9/3/2009

604.15E

SHEET NO. 1 OF 1