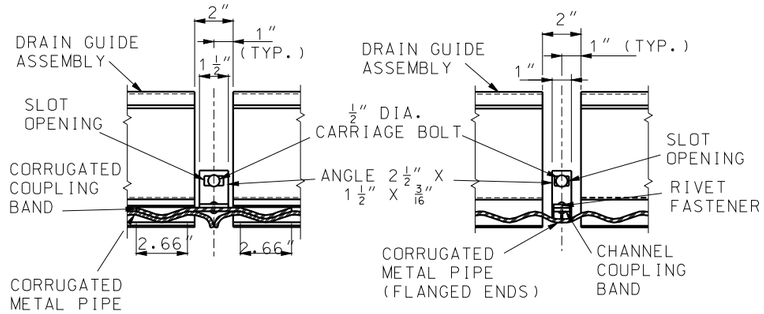

TYPE "A" TYPE "B"

JOINT CONNECTION SECTION

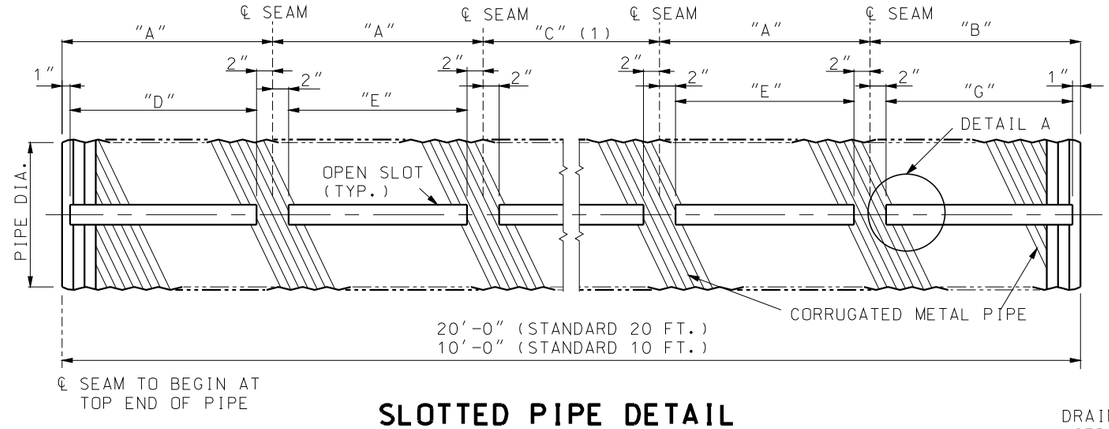

SLOTTED PIPE DETAIL

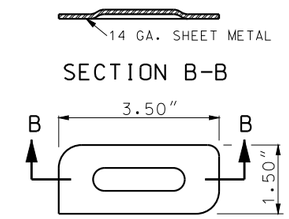

PLAN

LOCKING PLATE DETAIL

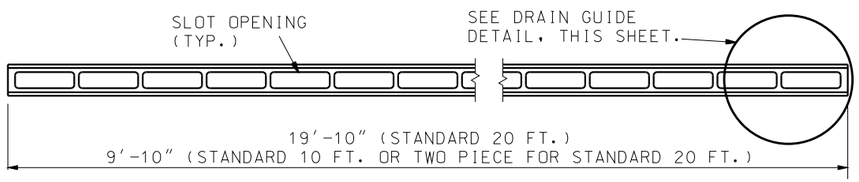

DRAIN GUIDE PLAN

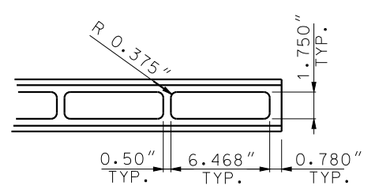

DRAIN GUIDE DETAIL

DIMENSION SCHEDULE								LOCKING PLATES REQUIRED (3)	
PIPE DIAMETER	A	B_{10}	G_{10}	B_{20}	G_{20}	D	E	10 FT.	20 FT.
12"	31 1/2"	25 1/2"	22 1/2"	19 1/2"	16 1/2"	28 1/2"	27 1/2"	9	17
15"	27 1/2"	10"	7"	20"	17"	24 1/2"	23 1/2"	10	19
18"	26 1/4"	15"	12"	33	3/4"	23 1/4"	22 1/4"	10	19
24"	25"	20"	17"	15"	12"	22"	21"	11	21
30"	24 3/4"	21"	18"	17 1/4"	14 1/4"	21 3/4"	20 3/4"	11	21
36"	24 5/8"	21 1/2"	18 1/2"	18 3/8"	15 3/8"	21 3/8"	20 5/8"	11	21

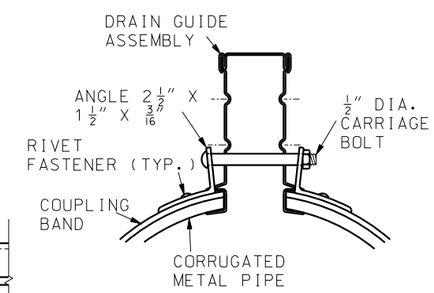

JOINT CONNECTION SECTION

(TYPICAL FOR JOINT CONNECTION SECTION TYPE "A" AND TYPE "B")

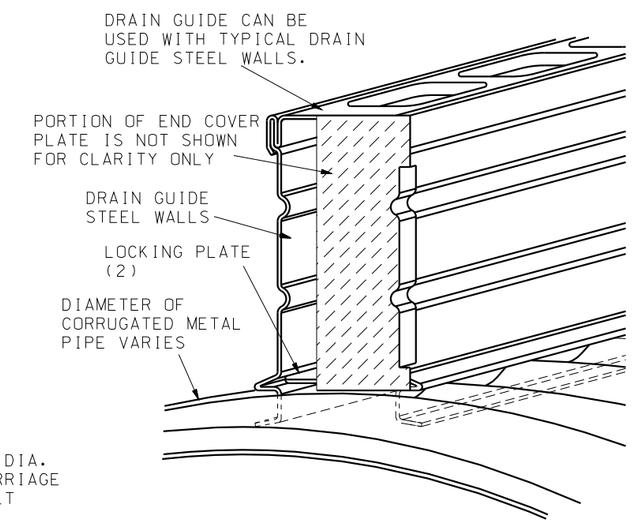

ISOMETRIC DETAIL

(1) FOR STANDARD 10 FT., 12" DIA. PIPE, "C" = 0. FOR ALL OTHER PIPE SIZES "C" IS IN MULTIPLES OF "A".
(2) LOCKING PLATE TO BE INSTALLED AT:
A. EACH END OF DRAIN GUIDE.
B. EACH SEAM.
C. EACH MID-POINT OF OPEN SLOT.
(3) IN 20 FT. SECTION FOR TWO PIECE DRAIN GUIDE, INCREASE NUMBER OF LOCKING PLATES BY TWO.

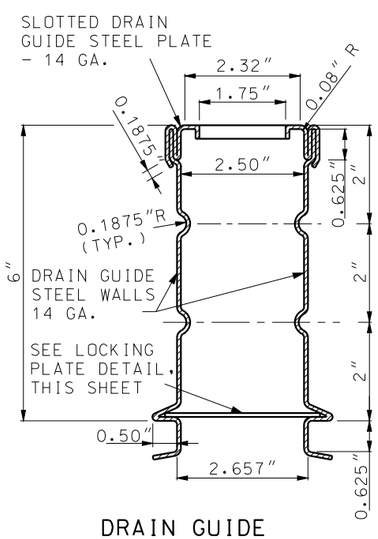

DRAIN GUIDE SECTION (TYP.)
DRAIN DETAILS

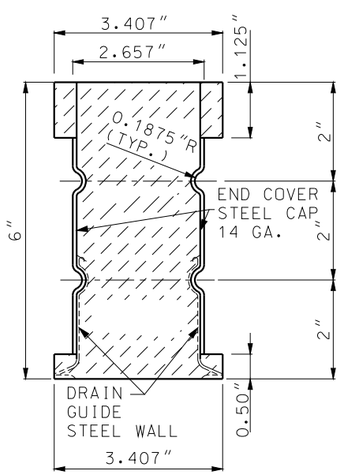

SECTION A-A
END COVER PLATE DETAIL

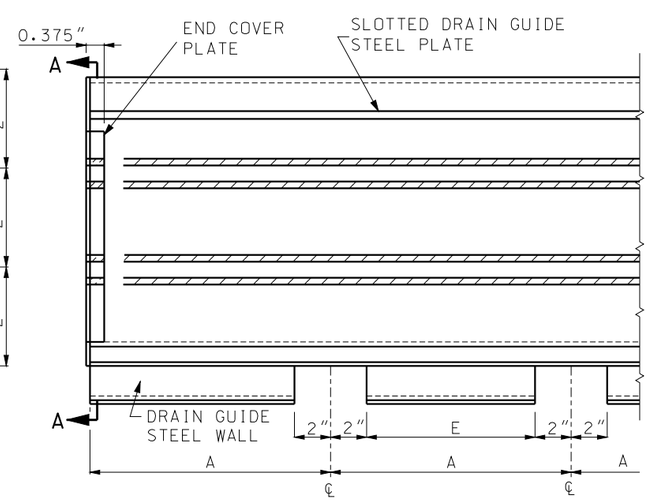

SIDE ELEVATION

TYPE A SLOTTED DRAIN
(FORMED SHEET)

CUT OUT SLOT FOR DRAIN GUIDE WALLS TO FIT OVER CORRUGATED METAL PIPE SEAMS (TYPICAL).

IF A SEAL IS PRESENT ON THIS SHEET IT HAS BEEN ELECTRONICALLY SEALED AND DATED.

MISSOURI HIGHWAYS AND TRANSPORTATION COMMISSION
105 WEST CAPITOL
JEFFERSON CITY, MO 65102
1-888-ASK-MODOT (1-888-275-6636)

STATE OF MISSOURI
KATHRYN PHILLIPS HARVEY
NUMBER PE-23751
PROFESSIONAL ENGINEER
THIS SHEET HAS BEEN SIGNED, SEALED AND DATED ELECTRONICALLY.

SLOTTED DRAIN
TYPE A

DATE EFFECTIVE: 03/01/1994
DATE PREPARED: 8/21/2009

604.70

SHEET NO. 1 OF 2

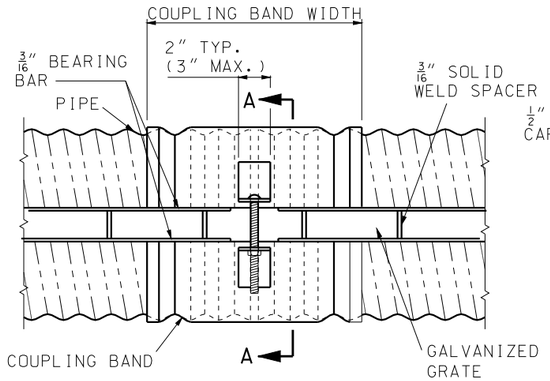

TOP VIEW

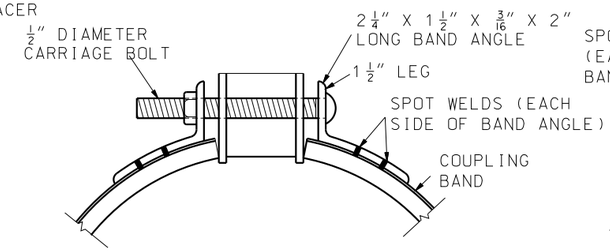

SECTION A-A

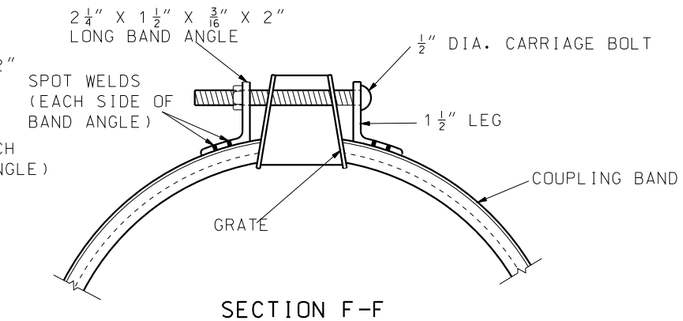

SECTION F-F

GRATE TYPE	"E"	"A"
C	2 1/2"	2 1/4"
C	6"	3"

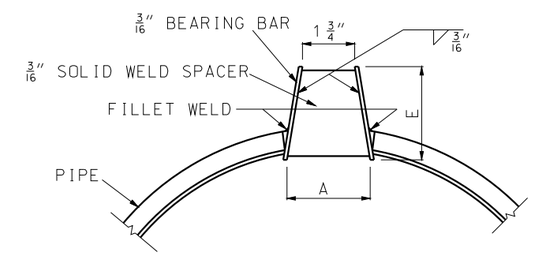

SECTION G-G

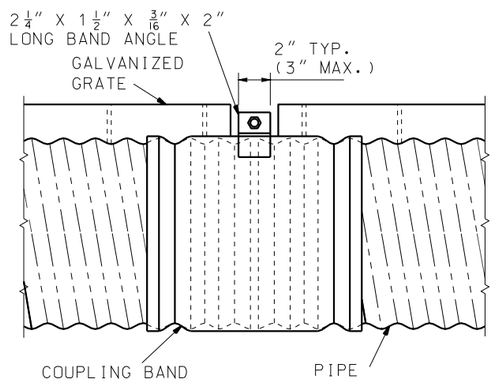

SIDE VIEW

TYPICAL COUPLING BAND

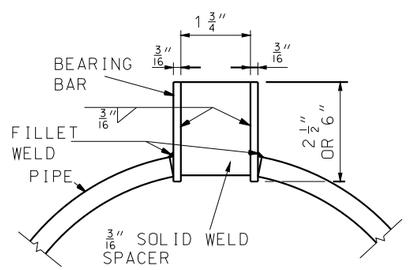

SECTION D-D

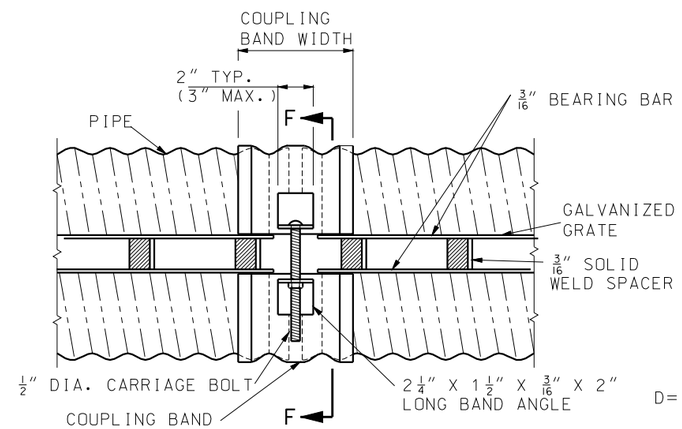

TOP VIEW

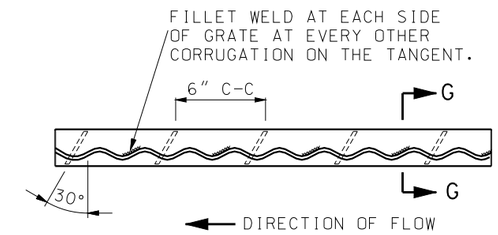

GRATE WELDING DETAIL

D= 12" 15" 18" 24" 30" 36"

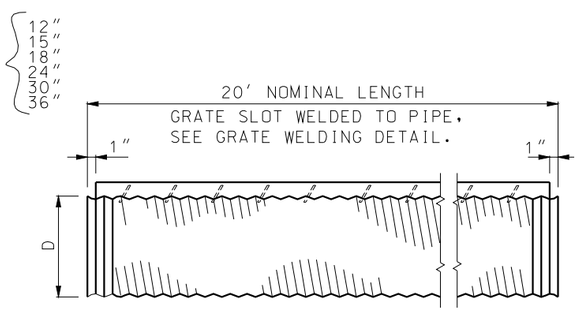

TYPICAL PIPE SECTION

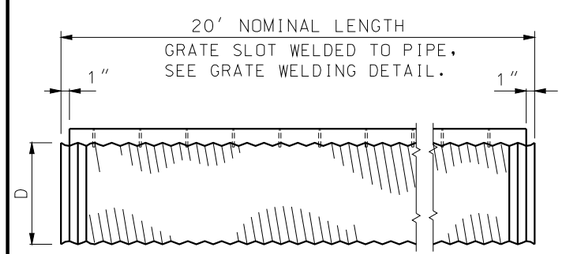

TYPICAL PIPE SECTION

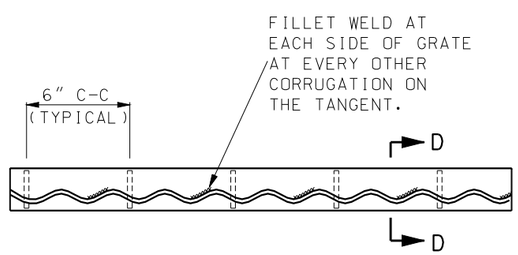

GRATE WELDING DETAIL

D= 12" 15" 18" 24" 30" 36"

STRUCTURAL STEEL SLOTTED DRAIN
(TYPE B)

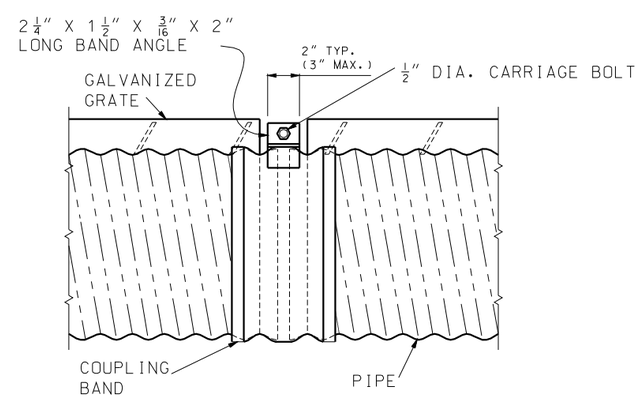

SIDE VIEW
TYPICAL COUPLING BAND

STRUCTURAL STEEL SLOTTED DRAIN
(TYPE C)

IF A SEAL IS PRESENT ON THIS SHEET IT HAS BEEN ELECTRONICALLY SEALED AND DATED.

MISSOURI HIGHWAYS AND TRANSPORTATION COMMISSION
105 WEST CAPITOL
JEFFERSON CITY, MO 65102
1-888-ASK-MODOT (1-888-275-6636)

STATE OF MISSOURI
KATHRYN PHILLIPS HARVEY
NUMBER PE-23751
PROFESSIONAL ENGINEER
THIS SHEET HAS BEEN SIGNED, SEALED AND DATED ELECTRONICALLY.

SLOTTED DRAIN
TYPE B AND TYPE C

DATE EFFECTIVE: 03/01/1994
DATE PREPARED: 8/21/2009

604.70

SHEET NO. 2 OF 2