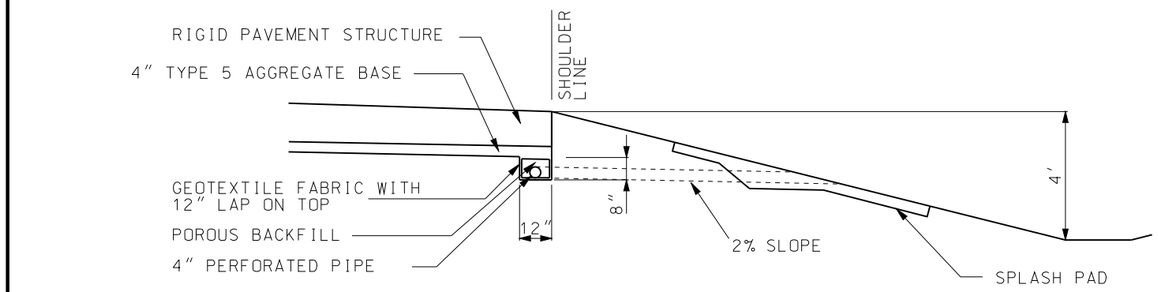

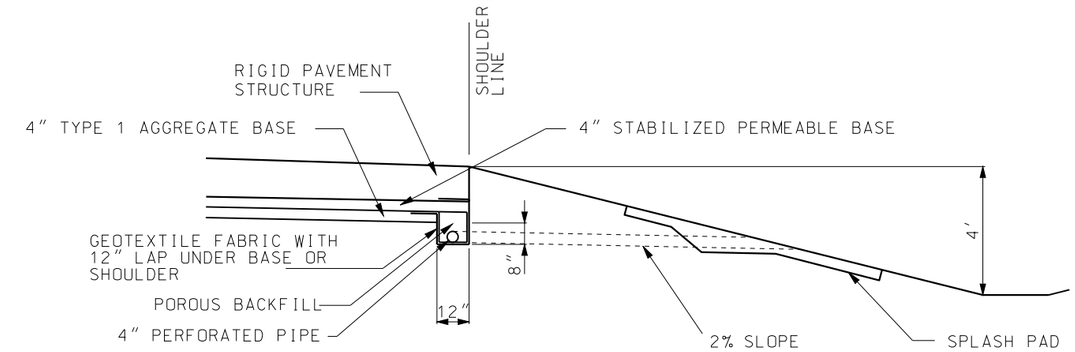

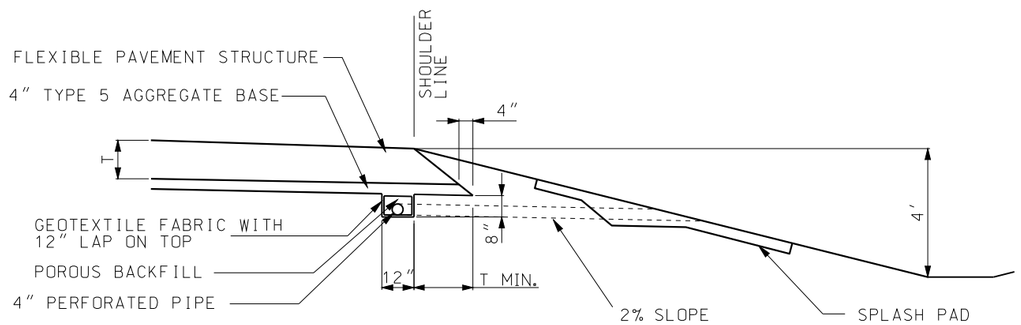

MEDIUM DUTY

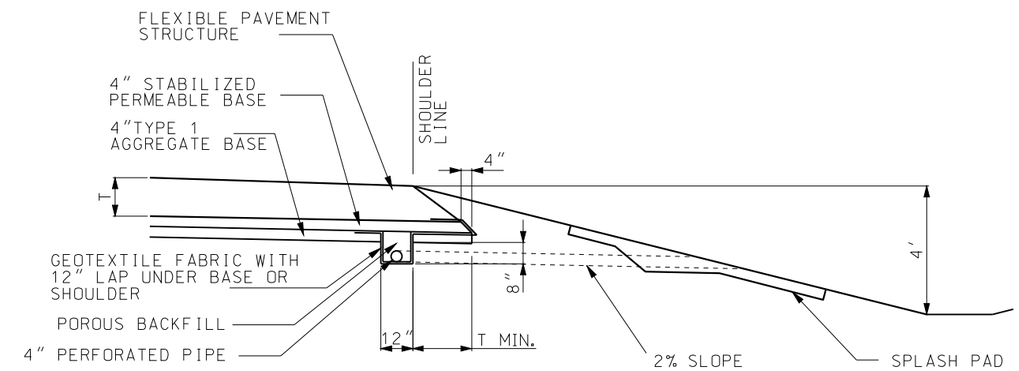

HEAVY DUTY

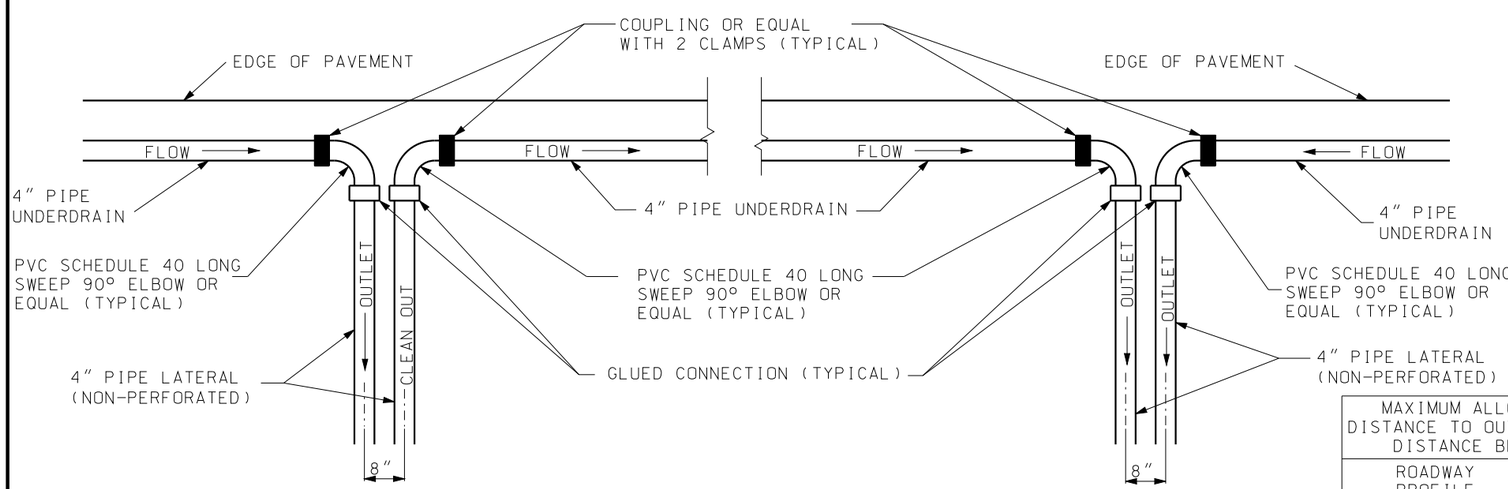

ON GRADIENT

AT SAGS

DETAIL OF PIPE AGGREGATE DRAIN OUTLETS

MAXIMUM ALLOWABLE DRAINAGE DISTANCE TO OUTLET OR SEPARATION DISTANCE BETWEEN OUTLETS	
ROADWAY PROFILE GRADIENT (%)	DISTANCE
≤ 1	250 FT.
> 1 AND ≤ 2	375 FT.
> 2	500 FT.

GENERAL NOTES:

ON SUPERELEVATED CURVES PLACE LONGITUDINAL UNDERDRAIN ON LOW SIDE ONLY.

CONSTRUCT OUTLETS AT LOW POINT OF SAG CURVE.

MISSOURI HIGHWAYS AND TRANSPORTATION COMMISSION
105 WEST CAPITOL
JEFFERSON CITY, MO 65102
1-888-ASK-MODOT (1-888-275-6636)

STATE OF MISSOURI
KATHRYN PHILLIPS HARVEY
NUMBER PE-23751
PROFESSIONAL ENGINEER
THIS SHEET HAS BEEN SIGNED, SEALED AND DATED ELECTRONICALLY.

PAVEMENT UNDERDRAINAGE

PIPE AGGREGATE PAVEMENT EDGE DRAINS FOR FULL DEPTH SHOULDERS

DATE EFFECTIVE: 12/01/2007
DATE PREPARED: 8/21/2009

605.10H

SHEET NO. 1 OF 3

IF A SEAL IS PRESENT ON THIS SHEET IT HAS BEEN ELECTRONICALLY SEALED AND DATED.

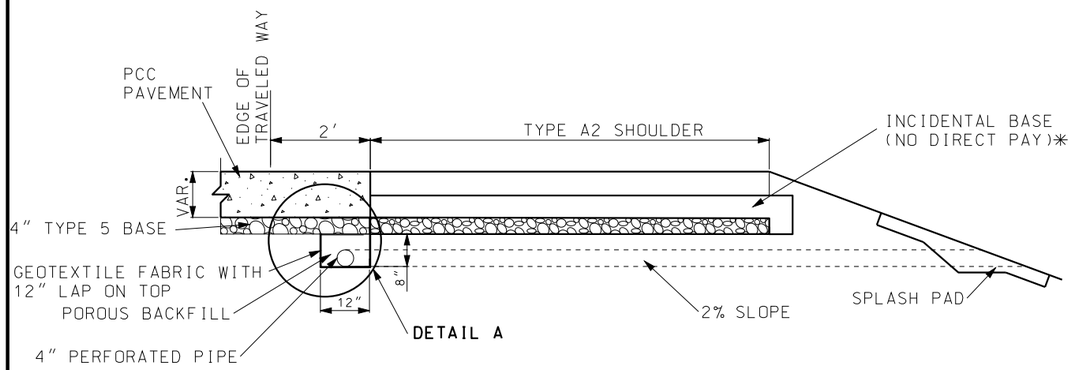

RIGID PAVEMENT WITH TYPE 5 BASE

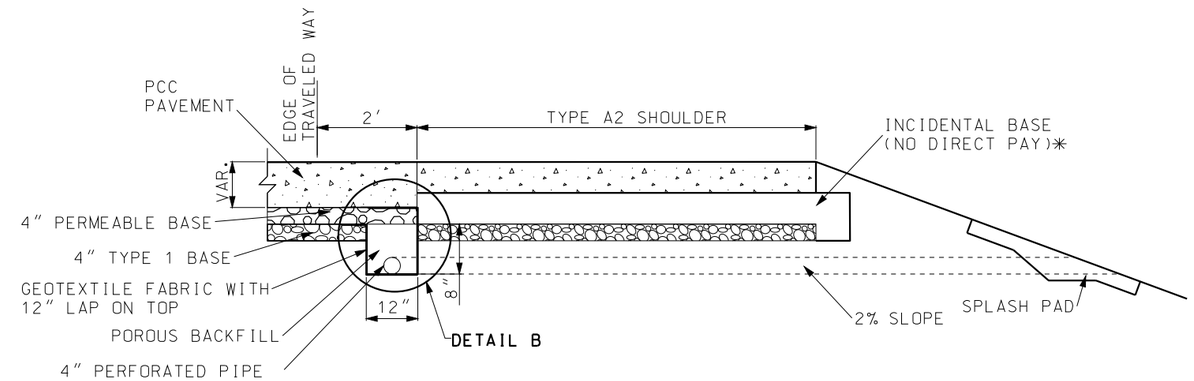

RIGID PAVEMENT WITH PERMEABLE BASE

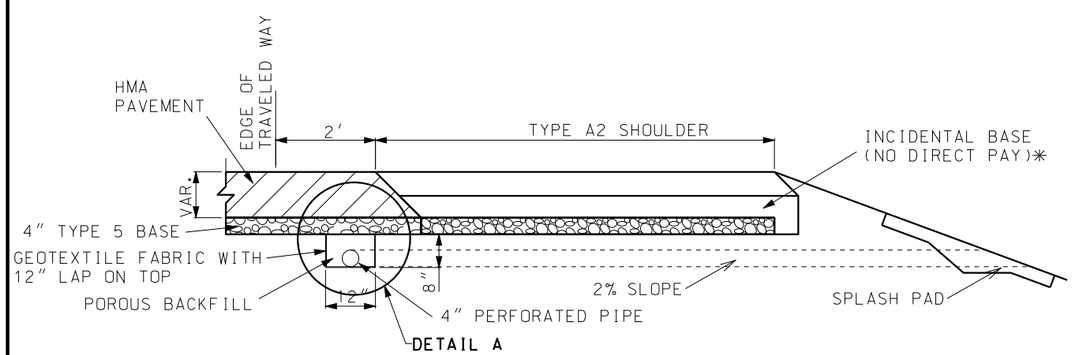

FLEXIBLE PAVEMENT WITH TYPE 5 BASE

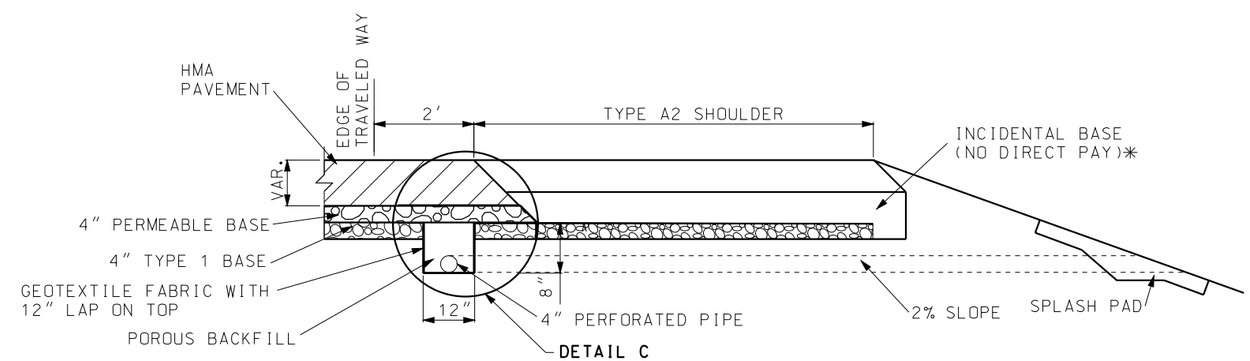

FLEXIBLE PAVEMENT WITH PERMEABLE BASE

PCC (PORTLAND CEMENT CONCRETE)

HMA (HOT MIX ASPHALT)

BASE

✳ BASE MATERIAL (ASPHALT MILLINGS, RECYCLED CONCRETE, TYPE 1 BASE, ETC.) APPROVED BY THE ENGINEER.

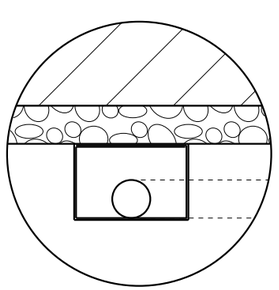

DETAIL A

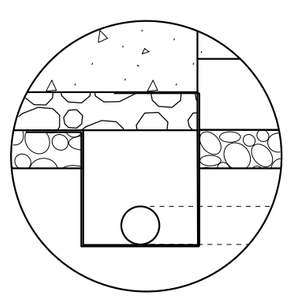

DETAIL B

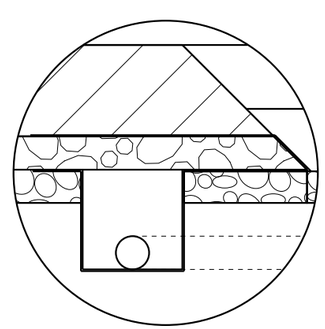

DETAIL C

GENERAL NOTES:

SEE DETAIL OF PIPE AGGREGATE DRAIN OUTLETS ON SHEET 1.

MISSOURI HIGHWAYS AND TRANSPORTATION COMMISSION
105 WEST CAPITOL
JEFFERSON CITY, MO 65102
1-888-ASK-MODOT (1-888-275-6636)

STATE OF MISSOURI
KATHRYN PHILLIPS HARVEY
NUMBER PE-23751
PROFESSIONAL ENGINEER
THIS SHEET HAS BEEN SIGNED, SEALED AND DATED ELECTRONICALLY.

PAVEMENT UNDERDRAINAGE

PIPE AGGREGATE PAVEMENT EDGE DRAINS FOR TYPE A2 SHOULDERS

DATE EFFECTIVE: 12/01/2007
DATE PREPARED: 8/21/2009

605.10H

SHEET NO. 2 OF 3

IF A SEAL IS PRESENT ON THIS SHEET IT HAS BEEN ELECTRONICALLY SEALED AND DATED.

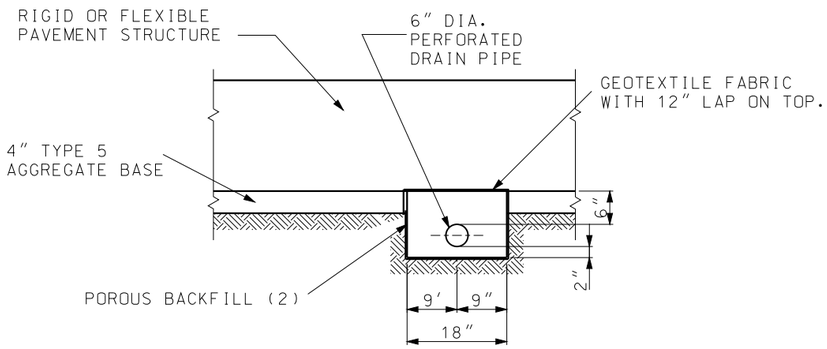

SECTION D-D
WITHOUT PERMEABLE BASE

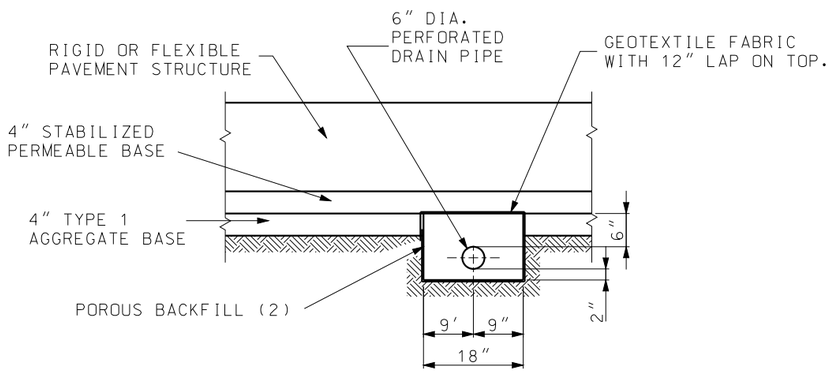

SECTION D-D
WITH PERMEABLE BASE

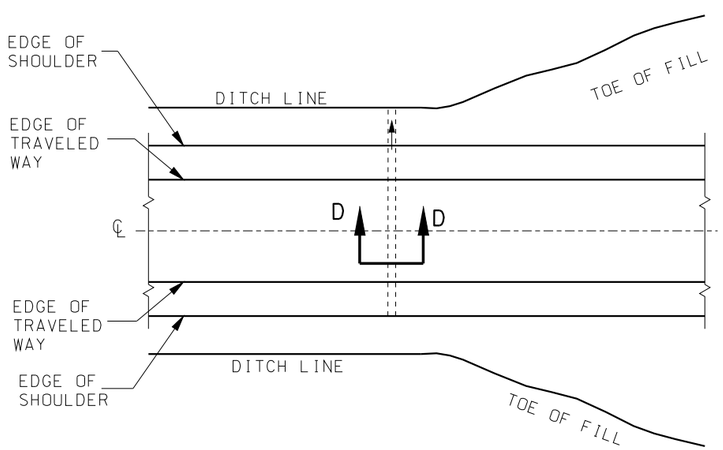

CROSS DRAIN

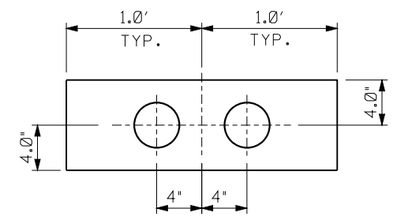

SECTION A-A

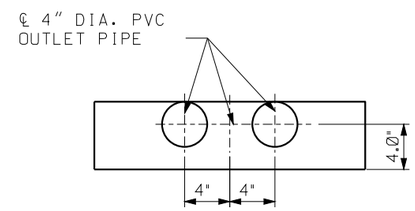

SECTION B-B

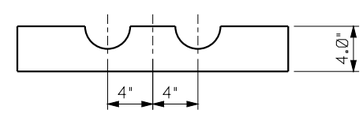

SECTION C-C

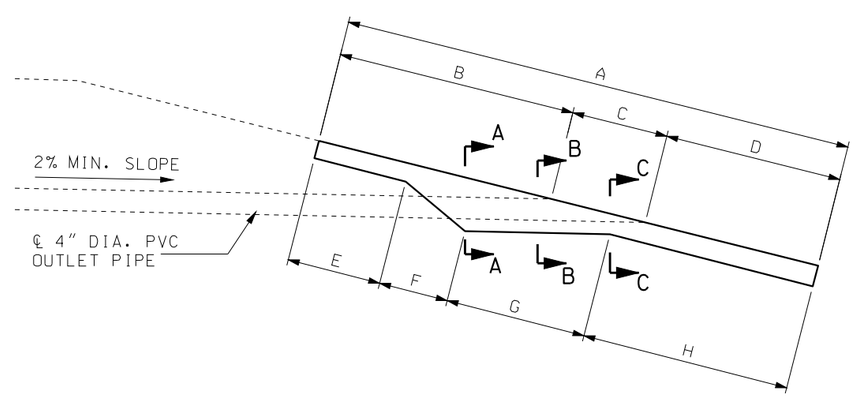

CONCRETE SPLASH PADS

ITEM	2:1	3:1	4:1	6:1
A	5.48'	6.19'	6.95'	8.58'
B	2.70'	3.07'	3.46'	4.28'
C	0.78'	1.12'	1.49'	2.30'
D	2.00'	2.00'	2.00'	2.00'
E	2.00'	2.00'	2.00'	2.00'
F	0.46'	0.61'	0.78'	1.18'
G	0.71'	1.07'	1.46'	2.27'
H	2.31'	2.51'	2.71'	3.13'
CONC.	0.15 C.Y.	0.17 C.Y.	0.20 C.Y.	0.25 C.Y.

GENERAL NOTES:

PRECAST CONCRETE SPLASH PADS MAY BE INSTALLED AS APPROVED BY THE ENGINEER.

TOP OF SPLASH PAD SHALL MATCH EXISTING CROSS SLOPE. CONSTRUCT BEND IN SPLASH PAD WHERE CROSS SLOPE CHANGES.

DIMENSIONS ARE APPROXIMATE AND CAN BE ADJUSTED AS DIRECTED BY THE ENGINEER.

MISSOURI HIGHWAYS AND TRANSPORTATION COMMISSION
105 WEST CAPITOL
JEFFERSON CITY, MO 65102
1-888-ASK-MODOT (1-888-275-6636)

STATE OF MISSOURI
KATHRYN PHILLIPS HARVEY
NUMBER PE-23751
PROFESSIONAL ENGINEER
THIS SHEET HAS BEEN SIGNED, SEALED AND DATED ELECTRONICALLY.

PAVEMENT UNDERDRAINAGE
CROSS DRAINS

DATE EFFECTIVE: 12/01/2007
DATE PREPARED: 8/21/2009

605.10H

SHEET NO. 3 OF 3

IF A SEAL IS PRESENT ON THIS SHEET IT HAS BEEN ELECTRONICALLY SEALED AND DATED.